116 West Main Street, Suite 201
St. Charles, Illinois 60174
Phone: 630.443.7755
Fax: 630.443.0533
www.wbkengineering.com

WILLS BURKE KELSEY ASSOCIATES

TRANSMITTAL

TO: **Mike Zakosek, P.E.**
Senior Project Manager
Kane County Division of Transportation
41W011 Burlington Road
St. Charles, IL 60175

Phone:
Fax #

DATE: December 12, 2011

RE: French Rd. over Burlington Creek
Section No. 08-00386-00-BR
Draft PDR

WBK Project #: 09-0057

Via:
- [ ] U.S. Mail
- [X] Hand Carry
- [ ] Fax
- [ ] Priority Overnight (next business day by 10:30)
- [ ] Standard Overnight (next business day by 3:00pm)
- [ ] 2nd day
- [ ] 3rd day

We are sending you: [X] Herewith [ ] Under Separate Cover

Copies	Description
1	Draft PDR

Transmitted for:
- [ ] Your Information and Files
- [X] As Requested
- [X] For Review and Comment
- [ ] Your Approval or Correction
- [ ] Other

Comments:

Mike –

For your review and comment.

Thank you.

Respectfully Submitted,

By: Andy Underwager, P.E., S.E.

cc: File

DRAFT PROJECT DEVELOPMENT REPORT
Categorical Exclusion - Group II

FRENCH ROAD (FAU 2331) OVER BURLINGTON CREEK

KANE COUNTY

SECTION NO. 08-00386-00-BR

PROJECT NO. BROS-0089(147)

JOB NO. P-91-270-09

December 12, 2011

Prepared for:
Kane County Division of Transportation

By:
Wills Burke Kelsey Associates
St. Charles, Illinois

Illinois Department of Transportation

Local Project Development Report for Group II Categorical Exclusions and Design Approval

Route: F.A.U. 2331 County: Kane

Local Agency: Kane County Division of Transportation Project No. BROS-0089(147)

L.A. Section No.: 08-00386-00-BR Project Length: 1120' (0.21 mi.)

Street/Road Name: French Road (C.H. 11)

Termini: 677' South of Bridge to 443' North of Bridge

☐ For Township or Road District bridge projects: The County Engineer certifies that the project design speed exceeds the minimum design speed recommended for this classification of roadway as provided in the BLRS Manual in order to prevent a deficient NBIS rating for approach roadway alignment appraisal. All elements have been designed to the chosen design speed unless noted otherwise in Section 2(e) and/or the attached BLR 22120.

County Engineer _____ Date _____

☒ Categorical Exclusion and Design Approval Recommended

Local Agency _____ Date _____

Regional Engineer _____ Date _____

This project will not have any significant impacts on the human environment; therefore, the FHWA approves the project as a Categorical Exclusion on _____ .
Date

☒ Design Approval

Bureau of Local Roads & Streets _____ Date _____

1. LOCATION AND EXISTING CONDITIONS

a. **Location** (attach location map to supplement narrative description)

The French Road Bridge over Burlington Creek is located in unincorporated Kane County in Sections 32 and 33 of Hampshire Township (Tier 42 North, Range 6 East) north of the Village of Burlington. The bridge is located approximately 0.9 mile south of Illinois Route 72. The project length is 1120 feet, from Sta. 13+35 to Sta. 24+55. See **Exhibit 1** for the Location Map.

b. **Description of Existing Facility** - Give narrative description, including such items as width of through, parking and turn lanes, alignment, traffic control devices, utilities, jurisdiction, maintenance responsibility, drainage, terrain and current land use (including major public facilities and local landmarks). Attach existing typical sections showing roadway widths, bridge widths, ROW widths, curb and gutter and surface types.

Land Use
The predominant land use is agriculture. The Forest Preserve District of Kane County owns the Hampshire South Forest Preserve on the east side of the roadway. The forest preserve is currently farmed and does not have any recreational facilities. The terrain is relatively flat.

Description of Roadway
French Road is functionally classified by IDOT as a Minor Arterial (Urban). The roadway is not on the National Highway System nor is it classified as a Strategic Regional Arterial route. The Kane County Division of Transportation has jurisdiction and maintenance responsibility for the roadway and bridge.

The existing horizontal alignment of French Road within the project limits consist of a tangent. The width of the right-of-way is variable. On the west side, the width ranges from approximately 30 feet to approximately 60 feet. The right-of-way is widest near the bridge. On the east side, the width ranges from approximately 33 feet to approximately 103 feet. The portion of Burlington Creek that runs parallel to the roadway is within the existing right-of-way on the east side. Title commitments were reviewed for easements. It was determined that NICOR and AT&T have overlapping 15-foot and 16.5-foot easements adjacent to the east right-of-way line. ComEd has an easement over the western half of the public right-of-way. **Exhibit 4** depicts the existing R.O.W. and easements.

Due to the proximity to the creek crossing, the grade within the project limits is mostly flat with the exception of the northern limits where it is approximately 0.7%. Just beyond the southern and northern limits of the project, the grades are approximately 2% sloping upward away from the project.

The existing cross section of French Road within the project limits consists of two 12-foot hot-mix asphalt traffic lanes with 2-foot (min.) aggregate shoulders on both side of the roadway. The aggregate shoulders widen to approximately 6 feet near the bridge with portions of the shoulder having significant amounts of grass and vegetation. The existing cross section over the bridge consists of two 12-foot hot-mix asphalt overlay traffic lanes and 10-foot shoulders. There are no turn lanes or sidewalks within the project limits. See **Exhibit 2** for the existing typical section.

Private driveway entrances are located Sta. 22+57 (LT) serving a farm, and Sta. 23+09 (LT) serving residence. Field entrances are located at Sta. 17+39 (LT) and Sta. 22+52 (RT).

Parking is prohibited by statute along French Road.

Drainage
The stormwater runoff from the southeast quadrant sheet flows into Burlington Creek, which is within the Kishwaukee River watershed of Kane County. Runoff from the northwest quadrant sheet flows away from the embankment into the adjacent land which is within the floodplain. Runoff from the northeast and southwest quadrants is conveyed by roadside ditches which outlet into the creek. Culverts convey stormwater underneath field entrances at Sta. 17+33 (LT.) and Sta. 22+51 (RT.) and underneath the private entrance at 23+04 (LT.). There appears to be no outlet for the stormwater between the culvert at the private entrance and the private entrance to the south.

The FEMA Flood Insurance Rate Map (FIRM) was reviewed (See **Exhibit 8**). French Road encroaches transversely upon the 100-year flood plain.

Utilities
To identify utility facilities within the project limits, a design stage request was submitted to J.U.L.I.E. which determined that the following companies have utilities within the project limits: AT&T, ComEd, Mediacom, and Nicor. Location information including available atlases were requested from these companies. AT&T provided a sketch of their buried copper and fiber optic cables. ComEd provided a letter indicating that they have 12kV overhead facilities and poles within the project site. NICOR provided an atlas which identified a 4" gas main on the east side of the roadway. Mediacom has not responded to our requests. See **Appendix F** for correspondence received from the utilities. **Exhibit 4** depicts the known utility locations.

Traffic Control
There are no intersections within the project limits, thus there is no traffic control.

Roadway Lighting
There is no roadway lighting within the limits of the project.

Public Transportation Facilities
The *RTA System Map, March 2009* was reviewed and there are no PACE bus routes along French Road within the project limits.

c. **Traffic Data**

Current ADT: 2,800 % trucks: 9

Will 80,000 lb. trucks be legally permitted on this route? ☒ Yes ☐ No

Design Year: 2040 ADT: 7,000 DHV: 700 % trucks: 9

CMAP provided traffic projections. Refer to **Appendix A** for the correspondence.

d. **Structures** - Identify location within the proposed improvement of all structures on attached location map. Attach a copy of the Structure Master Report for all structures within the project limits. Attach a copy of the Bridge Condition Report or the Bridge Deck Resurfacing approval letter for structures to be replaced, rehabilitated, or resurfaced.

The location of existing Structure No. 045-0040, is identified in **Exhibit 1**, Location Map. It was built in 1969 as C.H. 11, Section 32 B-R at Sta. 100+59. Due to the poor condition of the deck and superstructure, the bridge has a sufficiency rating of 49.1, which is structurally deficient. The bridge deck wearing surface was removed and replaced in 1981 as F.A.S. Rte. 99, Section 32-W & RS-79. The existing structure is a single span P.P.C. deck beam superstructure with reinforced concrete closed abutments and timber piling supported spread footings. The existing bridge length is 50'-6" back-to-back of abutments and measures 44'-0" face-to-face of concrete rail and curb with an out-to-out deck width of 46'-6". The bridge is skewed 15 degrees ahead left. The bridge deck has a bituminous overlay of approximately 4". See *Master Structure* Report in **Appendix C**. The Bridge Condition Report was approved on June 22, 2011. The scope of work is bridge replacement. The *Preliminary Bridge Design and Hydraulic Report* was approved on November 23, 2011. See **Appendix C** for the *Bridge Condition Report* and *Preliminary Bridge Design and Hydraulic Report* approvals.

e. **Railroads** - Identify location of all railroad crossings on attached location map and complete the following:

There are no railroad crossings within or near the project limits.

f. **Contiguous Sections** - Describe the existing typical sections at each end of the proposed improvement, including number of through lanes, turning lanes and parking lanes, lane widths and roadway width (f-f of curbs or e-e of shoulders).

The existing cross section of French Road to the south and north of the project limits is very similar to the existing cross section within the project limits.

2. Proposed Improvement

a. Discuss the need and purpose of the project:

According to the Illinois Department of Transportation "Master Structure Report" (See **Appendix C**), the bridge is structurally deficient. It has a sufficiency rating of 49.1. Because the bridge's Sufficiency Rating is less than 50.0, the bridge is eligible for rehabilitation or replacement under the Federal Highway Bridge Program (HBP). Superstructure replacement was evaluated, but it was determined that the substructure has insufficient capacity to accommodate the proposed loading. Therefore, complete replacement is proposed. The FHWA and IDOT confirmed that the bridge is eligible for HBP funding on September 13, 2011 (See Coordination Meeting Minutes in **Appendix E**).

The purpose of this project is to replace this structurally deficient bridge with a bridge that is structurally adequate for the proposed loading.

b. What design guidelines will be used for the proposed improvement? (Check One)
☐ Rural (BLRS Manual Chapter 32)
☒ Urban (BLRS Manual Chapter 32)
☐ 3R Guidelines (BLRS Manual Chapter 33)
☐ Bicycle Guidelines (BLRS Manual Chapter 42)

Functional Classification: ☒ Arterial ☐ Collector ☐ Local Road ☐ Other _____

Regulatory or Posted Speed Limit: 55 mph Design Speed: 60 mph

The roadway is functionally classified by IDOT as a Minor Arterial (Urban). The design criteria selected for this project are from BLR Figure 32-2C, "Geometric Design Criteria for Suburban Arterials (New Construction / Reconstruction)". The design table was selected in part because it allows for the selection of open drainage, which is more suitable for the rural character of the project area than curb and gutters.

c. Describe type of work to be accomplished by the improvement. Discussion should include width of through, parking and turning lanes, traffic control devices, drainage items (including storm sewer outfalls), alignment changes, railroad work, utility adjustments, intersection improvements, side slopes and clear zones. Attach typical sections, plan and profile sheets and intersection design studies when applicable.

Refer to **Exhibits 3** for the Proposed Typical Sections and **Exhibit 4** for the Proposed Plan and Profile.

The existing bridge will be removed and replaced with a single span bridge, Structure No. 045-3072. The superstructure type will consist of 30" WF composite steel beams supported on reinforced concrete integral spill-thru type abutments. The proposed bridge length is 74'-0" back-to-back of abutments with a clear roadway width of 40'-0" with Type SM steel railing. The bridge will be skewed 15 degrees ahead left.

Between the approximate limits of Sta. 15+00 and Sta. 21+40, the roadway will be reconstructed. North and south of these approximate limits, the roadway will be milled and surfaced or will be overlaid. To reconstruct the roadway for the entire length of the project would be challenging with respect to maintenance-of-traffic because of the additional driveway entrance and extra distance between the stop bars of the temporary bridge traffic signals. See **Section 14** for additional discussion regarding maintenance-of-traffic.

The main segment of the roadway approaches will be constructed with two 12-foot traffic lanes and 8-foot hot-mix asphalt shoulders. The hot-mix asphalt surface will extend 1-foot behind the back of the guardrail posts in accordance with IDOT Highway Standard 630201, "PCC/HMA Stabilization at Steel Plate Beam Guardrail.

North of the limits of the guardrail, the shoulders will consist of 2 feet of aggregate surface. This shoulder matches the existing shoulder width. Providing the full 8-foot shoulder width would have required numerous tree removals in the front yard of the residence at 14N686 French Road. In addition, it would require right-of-way acquisition from the forest preserve.

The proposed roadway pavement will be crowned at the centerline of the roadway and have cross-slopes of 2%. The shoulders will have a cross-slope of 4%. The proposed roadway will follow the existing horizontal alignment, which is on a tangent within the project limits.

The profile will be raised a maximum of approximately 6 inches so that the hydraulic opening of the bridge is adequate. The grade of the roadway will be 0.1% for most of the project length. There are two proposed vertical points of intersection. Because the grade differentials of 0.1% and 0.6% do not exceed 0.6%, vertical curves are not required by the design criteria.

Outside the limits of the guardrail, recoverable sideslopes, 1V:4H or flatter, are proposed. Behind guardrail, the sideslopes will generally be 1V:3H, except at the abutments where the sideslopes will be 1V:2H.

The proposed improvements will not significantly change the characteristics of drainage. Ditches will be graded in the southwestern and northeastern quadrants with new culverts proposed under the field entrances that are to be reconstructed. The ditches will continue to outfall into Burlington Creek. The ditches will be oversized near the outfalls to mitigate the fill in the floodplain.

There are no intersections to improve within the project limits, thus, there are no traffic control devices proposed.

No roadway lighting is proposed.

Reconstruction is proposed south of the touchdown because the guardrail limits must be extended to protect the entire length of need. This also happens to eliminate a potential condition of having a non-recoverable (1V:3H) slope between the roadway and the creek near the guardrail terminal. The desirable clear zone for this segment of French Road is 30 feet (BLR Manual Fig. 35-2A). This clear zone width is generally provided beyond the limits of the guardrail except for the four ComEd utility poles that are between 18 and 20 feet from the west edge of pavement. As stated in BLR Ch. 35, "BLRS policy is that the clear zone will be the values from Section 35-2 or the right-of-way line, whichever is less". Because the poles are at the right-of-way line, it is not considered a design variance to leave these poles in place. Though not a requirement, it is recommended that the County have ComEd relocate two poles within the limits of construction to the edge of the proposed right-of-way.

It appears that the proposed improvements will not be in conflict with any of the 6 ComEd poles within the project limits. Three of the poles are outside the limits of construction. Two poles (Sta. 15+40 LT. and 18+80 LT.) will be within areas that will have a proposed ground elevation within 6 inches of the existing ground elevation. The pole at Sta. 17+09 will have approximately 2 feet of less cover due to the grading of the ditch. Though these affects appear to be slight, ComEd should be consulted during Phase II engineering to verify whether or not ComEd considers these changes as conflicts. Though the pole at Sta. 22+26 LT. is outside the limits of construction, it may end up being close to the end of a proposed culvert underneath the nearby private entrance. During Phase II engineering, the potential for a conflict at this pole should be re-evaluated. The pole at Sta. 20+60 LT. is within the wetlands. Though it appears not to be affected by the roadway improvements, if it needs to be relocated as a result of other conflicts, ComEd will need a copy of the wetland report so that they can get a separate permit to work within the wetlands. As stated in the previous paragraph, regardless of whether the poles at Sta. 15+40 LT. and Sta. 17+09 LT are in conflict with the proposed improvements, the County should pursue having ComEd relocate them to the edge of the proposed right-of-way to maximize the clear zone. Because it appears that ComEd has an easement over the entire western half of the right-of-way, the cost of any relocation would be the responsibility of the County.

Due to the proximity of the ComEd overhead cables with respect to the bridge, construction activities may require that the cables be temporarily de-energized. Any such cost would be the responsibility of the County.

It appears that portions of AT&T copper and fiber optic cables will be in conflict with the proposed improvements due to a reduction in cover of up to 24 inches. The limits of the reduction in cover are from approximately Sta. 20+40 RT. to Sta. 23+10 RT. In addition, one of the copper cables may also be in conflict with the proposed eastern guardrail between Sta. 15+85 and Sta. 19+60. Because at least portions of the AT&T cables lie within the AT&T easement, the cost of at least some of these relocations would be the responsibility of the County.

It appears that portions of NICOR gas main will be in conflict with the proposed improvements due to a reduction in cover of up to 24 inches. The limits of the reduction in cover are from approximately Sta. 20+40 RT. to Sta. 23+10 RT. The NICOR atlas indicated that the gas main is 40 feet from and parallel to the roadway centerline. Because NICOR has an easement, the cost of any relocation would be the responsibility of the County.

Mediacom did not respond to our requests for information. Therefore, it is unknown whether Mediacom has facilities within the project limits.

Refer to **Appendix F** for utility coordination. The estimated costs for these utility relocations have been included in **Exhibit 7**.

d. Discuss items affecting improvement such as: hazardous mailbox supports, parking and truck restrictions, mail delivery from traffic lanes, justification (including warrants) for multi-way stop signs, traffic signals and other traffic control and railroad protective devices, stage construction, nearby airports, encroachments upon ROW and levels of illumination (if lighting will be provided):

No on-street parking is allowed on French Road, therefore, parking will not be provided.

The one roadside mailbox located within the project limits (14N686 French Road) does not have a hazardous support. The mailbox does not require relocation, though a temporary locations and a slight adjustment to the final location may be required during construction. The proposed driveway and shoulder widening near the existing mailbox will function as a mailbox turnout that will exceed the dimensions shown in Highway Standard BLR Std. 24-2.

The improvements presented in this report will be constructed as a part of a single contract. Thus, the improvements will not be constructed in stages.

Lighting is currently not provided and is not proposed.

There are no intersections within the limits of the project, therefore no traffic control is proposed.

There are no encroachments upon the right-of-way.

There are no nearby airports.

e. Identify each aspect to be constructed at less than the design guidelines and provide a clear description of required variances and appropriate justification. (BLRS Manual Section 27-7)

Foreslope steeper than 1V:4H are proposed. Most of the embankment has a foreslope of 1V:3H except close to the bridge abutments where the foreslopes are 1V:2H. Guardrail is proposed where foreslopes are steeper than 1V:4H. The reason for not providing 1V:4H foreslopes or flatter is to minimize the following: right-of-way taking, wetland impacts, and fill in the floodplain.

Clear zone protection on the west side for southbound traffic is less than the 425-foot length of need for the 30-foot clear zone. Approximately 250 feet of the length of need is protected by guardrail. The proposed length is shorter that the length of need because an opening is required for the two private entrances. The proposed location of the guardrail terminal will improve the length of protection provided due to the wider offset from the edge of pavement and its slightly longer length compared to the existing guardrail.

The FHWA approved these design variances during the September 13, 2011 coordination meeting (see **Appendix E**).

f. Current estimated cost of proposed improvement? **$1,571,054**

This figure includes $120,000 for utility relocation. The cost does not include design engineering, construction engineering, or right-of-way acquisition. See **Exhibit 7** for the Opinion of Probable Construction Cost.

g. Analyze the need for accommodating pedestrians, bicyclists and the handicapped. When applicable, describe the facilities to be provided including route continuity for the handicapped and marked crosswalk locations. (BLRS Manual Chapter 41)

There are no existing sidewalks or paths within the project limits and this section of French Road. Therefore, there are no accommodations proposed for pedestrians and the handicapped.

French Road is a corridor listed for a planned regional trail in the *2011 Kane/Kendall Bicycle Planning Map*. Because there are no immediate plans to construct a trail, bicycles will be accommodated in the meantime in the proposed 8-foot shoulders.

h. Discuss any proposed improvements being considered in adjacent segments:

There are no other improvements proposed.

3. **Crash Analysis (BLRS Manual Section 22-2.11(b)(9))**

a. Summarize crash data for the past three years, including a spot map or a location map showing crash locations when possible. Detail the types of crashes and include collision diagrams, if possible, especially at cluster sites. Give the source of this data.

Crash reports from 2007 through 2010 were obtained for French Road between Lenschow Road and Ill. Rte. 72 from the Kane County Division of Transportation's crash database. Three crashes occurred during the three-year period from 2008 through 2010. Two crashes occurred in 2007. Four of the five crashes were with fixed objects and one was a rear end collision with a disabled vehicle. See **Exhibit 5** for crash locations and types.

b. Analyze available crash data including results of field check. Discussion should include high crash locations, critical wet weather sites, and other crash patterns. If the data in inconclusive make a statement to that effect.

Four of the five crashes that occurred on French Road between Lenschow Road and Ill. Rte. 72 were loss-of-control crashes into fixed objects. The other crash was a rear-end collision involving a stalled vehicle. All four of the loss-of-control fixed object crashes occurred during snowy or wet conditions. An on-site inspection did not identify any particular factors that might have contributed to the frequency of loss-of-control crashes except that the area is surrounded by fields.

c. Describe proposed countermeasures.

This segment of French Road does not have shoulders. Therefore, vehicles that begin to lose control are not likely to recover from loss-of-control if the tires cross into the shoulder. Paved shoulders, 8 feet wide, are proposed. The extra pavement surface will provide vehicles more space to recover from a temporary loss-of-control event.

4. **Right-of-Way**

a. Describe the right-of-way taking, including the total area required for each of the following categories: ROW, permanent easements, temporary easements and temporary land use permits. Include: width of taking, number of property owners, character of land; i.e., farm, residential, commercial or publicly owned properties,

anticipated effects on properties to remain and location of any improvements with respect to required right-of-way. Discuss any effects on setbacks required by zoning.

Approximately 0.244 acre of right-of-way will need to be acquired from one parcel. The proposed 20-foot and variable width of the taking will result in a 50-foot (minimum) right-of-way width from the centerline for the entire frontage of that parcel. This parcel is farmland.

Approximately 0.151 acre of temporary easements will need to be acquired from two parcels. The width varies from 5 feet to 20 feet to accommodate grading and driveway reconstruction. One of the parcels is farmland and the other is a residential property not associated with the surrounding farmland.

See **Exhibit 9**, Summary of Right-of-Way and Easement Acquisition for P.I.N.s, width of taking, and other details pertaining to the two parcels involved.

b. Are any persons, businesses or farms to be displaced?
☐ Yes ☒ No

5. Prime Farmland (BLRS Manual Section 20-10)

a. If the project requires more than 3 acres/mile (0.75 hectares/kilometers), 10 acres (4 hectares) for a non-linear improvement, or the project ROW is not contiguous to the existing ROW, contact the Illinois Department of Agriculture and attach results of the coordination.

This project is not subject to the coordination with the Illinois Department of Agriculture because it is a bridge project, which is considered a non-linear project that requires less than 10 acres of right-of-way.

b. When a project requires consultation with the Natural Resource Conservation Service (Letter #85-19), fill out Form AD-1006 and submit it to the local office of NRCS. Attach the completed form, otherwise explain why the project is exempt from consultation.

This project is not subject to the coordination with the Natural Resource Conservation Service because it is a bridge project, which is considered a non-linear project that requires less than 10 acres of right-of-way.

6. Floodplain Encroachment (BLRS Manual Section 20-7)

Does the proposed work cross or encroach upon a 100-year floodplain, including a regulatory floodway?
☒ Yes ☐ No

If yes, summarize the location hydraulics study, regulatory floodway restrictions, the effect of any encroachment (including a comparison between existing and proposed conditions) and the effect of over-the-road flow on the proposed transportation facility. Attach any available floodplain maps.

The project encroaches transversely on the 100-year floodplain of Burlington Creek, see **Exhibit 8** for the FEMA Flood Insurance Rate Map (FIRM) for reference. Burlington Creek is <u>not</u> a regulatory floodway. Therefore, the project will be authorized by Statewide Permit No. 2 provided that it is constructed in accordance with the conditions of the permit (see **Appendix C** for the IDNR-OWR Statewide Permit No. 2 Authorization).

Per Article 410 of the Kane County Stormwater Ordinance, floodplain fill and compensatory storage was calculated for this project. The floodplain fill and compensatory storage volumes were calculated based on the natural water surface elevations from the Flood Insurance Study (FIS) model. Kane County requires all floodplain fill to be compensated at a 1.5:1 ratio with a minimum 1:1 ratio within the Normal to 10-year flood elevation, and a minimum 1:1 ratio within the 10-year to 100-year flood elevation. The additional 0.5:1 can be provided in either the Normal to 10-year or 10-year to 100-year floodplains. The proposed fill will be 30 CY in the Normal to 10-year flood plain and 57 CY 10-year to 100-year flood plain. The compensatory storage to be provided will be 396 CY in the Normal to 10-year flood plain and 142 CY 10-year to 100-year flood plain. The

compensatory storage, which exceeds the Ordinance requirements, will be provided as the result of increasing the area of the bridge opening and oversized ditches.
Over-the-road flow does not occur for the existing roadway and bridge configuration for the 100-year flood and will not occur for the proposed roadway and bridge configuration as the waterway opening will be larger in the proposed condition. The *Preliminary Bridge Design and Hydraulic Report* was approved on November 23, 2011 (see **Appendix C**).

7. **Phase I & II NPDES Storm Water Permit Requirements (BLRS Manual Section 7-4.01)**

Will the project involve soil disturbance of 1 acre (0.4 hectares) or more?
☒ Yes ☐ No

This project must comply with the Phase II NPDES Storm Water Permit requirements. A Kane County Stormwater Permit will be required for this project, to be completed during Phase II.

8. **"404" Permit (BLRS Manual Section 7-4.02)**

If this project involves water regulated by Section 404, is the project covered by a nationwide permit?
☐ Yes ☒ No

A meeting with representative of the U.S. Army Corps of Engineers was held on site on October 18, 2010 (see **Appendix D** for the meeting notes). The project was assigned this project number: LRC 2010-363. This project will be processed under the Regional Permit Program (RPP). As a requirement of this permit, the Kane-DuPage Soil and Water Conservation District must certify that the erosion and sediment control plans meet Technical Standards. In addition, a Kane County Stormwater permit must be obtained. The permitting process will be completed during Phase II.

9. **Special Waste (BLRS Manual Section 20-12)**

a. Following the special waste assessment screening criteria shown on Figure 20-12A of the BLRS Manual, is Preliminary Environmental Site Assessment (PESA) required?
☐ Yes ☒ No

Due to the fact that the land has always been agricultural, residential or undeveloped, and there are no LUST or CERCLIS sites, and that there are no visible signs of contamination, there is low risk for special waste. Therefore, a PESA in not required based on the screening criteria.

b. If PESA is required, is special waste located on property to be acquired in the name of the state or are contract plans being prepared by the state?
☐ Yes ☐ No ☒ N/A

c. If PESA is required, did the PESA results determine that the project is a "moderate" or "high" risk for special waste?
☐ Yes ☐ No ☒ N/A

10. **Environmental Survey (BLRS Manual Section 20-2)**
Whenever a project involves land acquisition (including easements), any in-stream work (including drainage structure run-around), or is located within or adjacent to historic properties listed in (or eligible for) the National Register of Historic Places, wetlands or known locations of threatened or endangered species, the Environmental Survey Request Form should be submitted early in the project development phase.

Biological resources and wetland were cleared for design approval and letting on December 5, 2011. Cultural resources were cleared for design approval and letting on January 27, 2011. See the "Project Overview" Form in **Appendix B** for the environmental signoffs.

a. Wild and Scenic Rivers - If this project crosses or affects a river on the National Wild and Scenic Rivers System or a river listed in the Nationwide Inventory of Rivers with potential for inclusion on the system, include coordination between the National Park Service and the Bureau of Design and Environment (BDE).
☐ Involvement ☒ No Involvement

b. Wetlands - If the proposed work involves the use of regulatory wetlands, prepare a "wetlands study" describing the wetlands taking, avoidance minimization and any mitigation measures. Include results of coordination.
☒ Involvement ☐ No Involvement

A Wetland Assessment Report and *Wetland Impact Evaluation* (WIE) form was submitted to IDOT. The wetlands have been cleared for design approval and letting on December 5, 2011 (See **Appendix B**). By agreement, no coordination with the IDNR or the U.S. Fish and Wildlife Service is required.

In summary, the wetland impacts will be mitigated by the purchase of credits from an in-basin wetland bank site using a mitigation ratio of 1.5:1. Thus, the proposed wetland impact of 0.100 acre and waters impact of 0.027 acre will require a purchase of 0.191 acre of credit will be required prior to construction. All wetlands have FQIs that indicate very low natural quality. Note that changes in the proposed design since the submittal in of the WIE resulted in slight changes in the areas of impact of each wetland listed in the *Biological Resource Review Memorandum* (See **Appendix B**). The area of the proposed riprap was extended on the east side of the bridge to enhance stream bank protection, thus increasing waters and wetland impacts on that side of the bridge. On the west side, the sizes of the ditches were decreased because it was determined that compensatory stormwater storage provided exceeded what was required. This resulted in a reduction in the area of wetland impact. Based on these design enhancements, the area of waters impact increased by 0.007 acre and the area of wetland impact decreased by 0.012 acre, resulting in a net decrease of 0.005 acre compared to the areas in the *Biological Resource Review Memorandum.*

c. Archaeological and Historical Preservation - Include copy of cultural resources clearance by BDE, SHPO or ACHP.
☐ Involvement ☒ No Involvement

See letter of concurrence from the State Historic Preservation Officer in **Appendix B**.

d. Threatened or Endangered Species - Include copy of biological resources memorandum or signoff by BDE.
☐ Involvement ☒ No Involvement

e. Stream Modification and Wildlife Impacts - Include copies of any correspondence between BDE and IDOC or U.S. Fish and Wildlife Service. Attach copies of any additional coordination between local agency and IDOC or U.S. Fish and Wildlife Service whenever required as a result of biological review by BDE. Address any proposed mitigation measures.
☐ Involvement ☒ No Involvement

11. **Section 4(f) Lands (BLRS Manual Section 20-3)**

Does this project require any right-of-way, including temporary construction easements, from a publicly owned park, recreational area, wildlife and waterfowl, or any historic site in or eligible for the National Register of Historic Places?
☐ Yes ☒ No

The project does require right-of-way or easements from the parcel that is owned by the Forest Preserve District of Kane County.

12. **Air Quality (BLRS Manual Section 20-11)** Check One:

a. ☐ This project is in an attainment area.

☒ Projects within a portion of a nonattainment area for which the Chicago Metropolitan Agency for Planning (CMAP) is the MPO.

This project is included in the 2030 RTP (Regional Transportation Plan) and in the Transportation Improvement Program (TIP), endorsed by the CMAP, the region's Metropolitan Planning Organization. The 2030 RTP (Regional Transportation Plan) was found to conform by the Federal Highway Administration (FHWA) and the Federal Transit Administration (FTA) on 10/20/2003.

The TIP was found to conform by the FHWA on 10/16/2006 and by the FTA on 10/16/2006.

The TIP Number for this project is 09-08-0036.

b. **Mobile Source Air Toxics (See BDE PM 52-06)**

This project will not result in any meaningful changes in traffic volumes, vehicle mix, location of the exiting facility, or any other factor that would cause an increase in emissions relative to the no-build alternative. As such, FHWA has determined that this project will generate minimal air quality impacts for Clean Air Act criteria pollutants and has not been linked with any special Mobile Source Air Toxic concerns. Consequently, this effort is exempt from analysis for MSATs.

Moreover, EPA regulations for vehicle engines and fuels will cause overall MSATs to decline significantly over the next 20 years. Even after accounting for a 64 percent increase in VMT, FHWA predicts MSATs will decline in the range of 57 to 87 percent, from 2000 to 2020, based on regulations now in effect, even with a projected 64 percent increase in VMT. This will both reduce the background level of MSATs as well as the possibility of even minor MSAT emissions from this project.

c. **Construction-related Particulate Matter**

Demolition and construction activities can result in short-term increases in fugitive dust and equipment-related particulate emissions in and around the project area. (Equipment-related particulate emissions are usually insignificant when equipment is well maintained.) The potential air quality impacts will be short-term, occurring only when demolition and construction work is in progress and local conditions are appropriate.

The potential for fugitive dust emissions typically is associated with building demolition, ground clearing, site preparation, grading, stockpiling of materials, on-site movement of equipment, and transportation of materials. The potential is greatest during dry periods, periods of intense construction activity, and during high wind conditions.

The Department's Standard Specifications for Road and Bridge Construction include provisions on dust control. Under these provisions, dust and airborne dirt generated by construction activities will be controlled through dust control procedures or a specific dust control plan, when warranted. The contractor and the Department will meet to review the nature and extent of dust-generating activities and will cooperatively develop specific types of control techniques appropriate to the specific situation. Techniques that may warrant consideration include measures such as minimizing track-out of soil onto nearby publicly-traveled roads, reducing speed on unpaved roads, covering haul vehicles, and applying chemical dust suppressants or water to exposed surfaces, particularly those on which construction vehicles travel. With the application of appropriate measures to limit dust emissions during construction, this project will not cause any significant, short-term particulate matter air quality impacts.

d. **Project-level Hot Spot Analysis. Check One:**

☐ This project is in an attainment area and does not require a hot spot analysis.

☒ This project does not meet the definition of a project of air quality concern as defined in 40 CFR 93.123(b)(1) due to low ADT and low percentage of diesel trucks. It has been determined that the project will not cause or contribute to any new localized $PM_{2.5}$ or PM_{10} violations or increase the frequency or severity of any $PM_{2.5}$ or PM_{10} violations. The USEPA has determined that such projects meet the Clean Air Act's requirement without any further Hot-Spot analysis.

☐ This project is in a non-attainment or maintenance area and is a project of air quality concern. Therefore, a qualitative hot spot analysis is required (see Attachment).

e. **COSIM**

Are through lanes or auxiliary turn lanes being added with this project?

☐ Yes ☒ No

No COSIM analysis is required.

13. **Noise (BLRS Manual Section 20-6)**

If this project involves a new alignment, additional lanes, or involves a significant alignment change, attach a traffic noise analysis.

There are no proposed changes in the horizontal alignment and there are no proposed capacity improvements. Therefore, no traffic noise analysis has been performed.

14. **Maintenance of Traffic (BLRS Manual Section 22-2.11(b)(9))**

Discuss how vehicle traffic and pedestrians will be accommodated during construction, including the effect of any road closure and sidewalk removal. If the road will be closed, include information concerning location of alternate routes and their ability to handle the additional traffic (street width, number of traffic lanes, structural adequacy, etc.).

All traffic control will be in accordance with IDOT Highway Standards, District One Details, and the Illinois Manual on Uniform Traffic Control Devices (Ill. MUTCD).

It is anticipated that construction will require three major stages. Traffic during Stages 1 and 2 will be maintained in accordance with IDOT Highway Standard 701321 (Lane Closure, 2L, 2W, Bridge Repair with Barrier). Stages 1 and 2 will require temporary bridge traffic signals in accordance with District One Detail BE-805 (Temporary Lighting and Traffic Signals for Single Lane Staging). See **Exhibit 6** for Maintenance-of-Traffic Typical Sections. To minimize the number of signal phases, the private entrance at Sta. 23+04 LT. will be temporarily closed. The residence will instead utilize the entrance at Sta. 22+57 LT. which is connected to its driveway. The southern stop bar will be positioned north of the private entrance at Sta. 13+23 LT. to avoid the addition of an extra phase and to reduce the amount of temporary pavement required. The northern stop bar will be positioned north of the private entrance at Sta. 23+04 LT. to avoid the need for temporary pavement past the limits of the proposed guardrail.

Because the temporary bridge signals will not be operational during the planting or harvesting season, the field entrances at Sta. 14+00 LT. Sta. 22+51 RT. and will not have their own signal phases. Signs with instructions to follow the last vehicle in the direction of traffic will be posted at these field entrances. The volume of traffic is low enough that the temporary bridge traffic signals will not cause excessive delays. Temporary pavement will be constructed prior to Stage 1. Temporary pavement will be constructed on the east side generally between the existing edge of pavement and the existing guardrail and as needed to fit the lane shift tapers in IDOT Highway Standard 701321. The west side of the bridge and approach roadway will be constructed during Stage 1. Traffic during Stage 1 will utilize the existing pavement and bridge deck on the east side. The east side of the bridge and approach roadway will be constructed during Stage 2. Traffic during Stage 2 will utilize the pavement and bridge deck that will have been constructed on the west side. Temporary pavement will be required to accomodate the lane shift tapers in IDOT Highway Standard 701321. Temporary concrete barriers will be required to protect traffic from drop offs and to protect the workers. Stage 3 will

involve milling and surfacing operations at each end of the project that could not be constructed during Stages 1 and 2 due to the presence of the temporary concrete barrier and crash cushions. IDOT Highway Standards 701201, 701301, 701306, and 701311 are some of the appropriate traffic control standards for these construction activities.

IDOT Highway Standards 701001, 701006, are 701011 are some of the appropriate traffic control standards for off-road construction activities such as landscaping.

There are currently no pedestrian or bicycle accommodations provided on French Road. Therefore no special accommodations are proposed for pedestrians or bicycles during construction.

15. **Public Involvement (BLRS Manual Chapter 21)**

a. Summarize informational meetings, council or board meetings, media coverage and personal contact with public.

There have been no informational meetings, council or board meetings, media or coverage regarding this project. Letters describing the project were sent to the two affected property owners on December X, 2011 (see **Appendix G** for copies of the correspondence). This section will be enhanced depending on the responses received, if any.

b. Has any opposition been expressed toward the improvement?
☐ Yes ☒ No

c. How are public hearing requirements being fulfilled?

As directed in the September 13, 2011 FHWA Coordination Meeting (**Appendix E**), the only public involvement required for this project was to contact the property owners. Therefore no public hearing was required, nor was one held.

16. **Coordination: LA-IDOT-FHWA (BLRS Manual Section 22-1.02)**

The coordination meeting was held on September 13, 2011. Meeting minutes of coordination meetings are included in **Appendix E**.

17. **Other Coordination**
Attach results.

There was no coordination involving other agencies or organizations for this project.

18. **Summary of Commitments**

1. Wetlands impacts will be mitigated off site.

2. Trees will be replaced.

SUMMARY OF ATTACHMENTS

Exhibits

Exhibit 1	Location Map
Exhibit 2	Existing Typical Section
Exhibit 3	Proposed Typical Section
Exhibit 4	Proposed Plan and Profile
Exhibit 5	Crash Locations
Exhibit 6	Maintenance-of-Traffic Typical Sections
Exhibit 7	Opinion of Probable Construction Cost
Exhibit 8	Flood Insurance Rate Map (FIRM)
Exhibit 9	Summary of Right-of-Way and Easement Acquisition

Appendix A- CMAP Correspondence

Traffic Projections ---- A-1

Appendix B- Environmental Coordination

Project Overview Form ---- B-1
Biological Resources Signoff ---- B-2
Biological Resources Review Memorandum ---- B-3
Cultural Resource Concurrence Memorandum ---- B-5

Appendix C- Structural and Hydraulic Approvals

Master Structure Report ---- C-1
Bridge Condition Report Approval Letter ---- C-3
Preliminary Bridge Design & Hydraulic Report Approval Letter ---- C-4
IDNR-OWR Statewide Permit No. 2 Authorization ---- C-7

Appendix D- Permit Coordination

U.S.A.C.E. Meeting Notes, October 18, 2011 ---- D-1

Appendix E- FHWA Coordination

FHWA Meeting Minutes, September 13, 2011 ---- E-1

Appendix F- Utility Coordination

J.U.L.I.E. Ticket ---- F-1
AT&T Response ---- F-2
ComEd Response ---- F-3
Mediacom Letter ---- F-5
NICOR Response ---- F-6

Appendix G- Public Involvement

Letters to Property Owners ---- G-1

EXHIBITS

Exhibit 1	Location Map
Exhibit 2	Existing Typical Sections
Exhibit 3	Proposed Typical Sections
Exhibit 4	Proposed Plan and Profile
Exhibit 5	Crash Locations
Exhibit 6	Maintenance-of-Traffic Typical Sections
Exhibit 7	Opinion of Probable Construction Cost
Exhibit 8	Flood Insurance Rate Map (FIRM)
Exhibit 9	Summary of Right-of-Way and Easement Acquisition

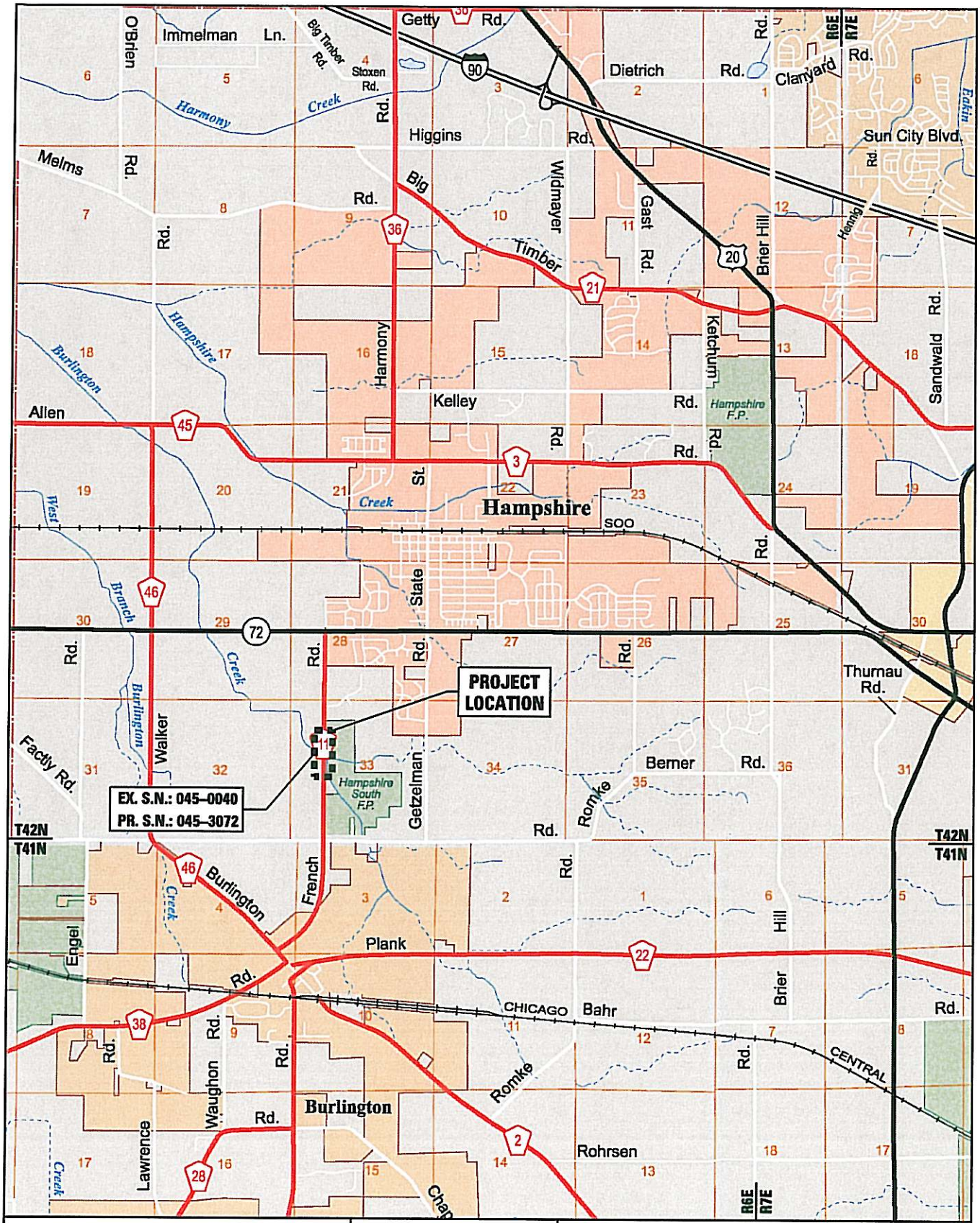

WILLS BURKE KELSEY ASSOCIATES LTD.
116 West Main Street, Suite 201
St. Charles, Illinois 60174
(630) 443-7755

N

0 mi. 1 mi.

LOCATION MAP

FRENCH RD. OVER BURLINGTON CREEK
KANE COUNTY
SEC. 08-00386-00-BR

EXHIBIT 1

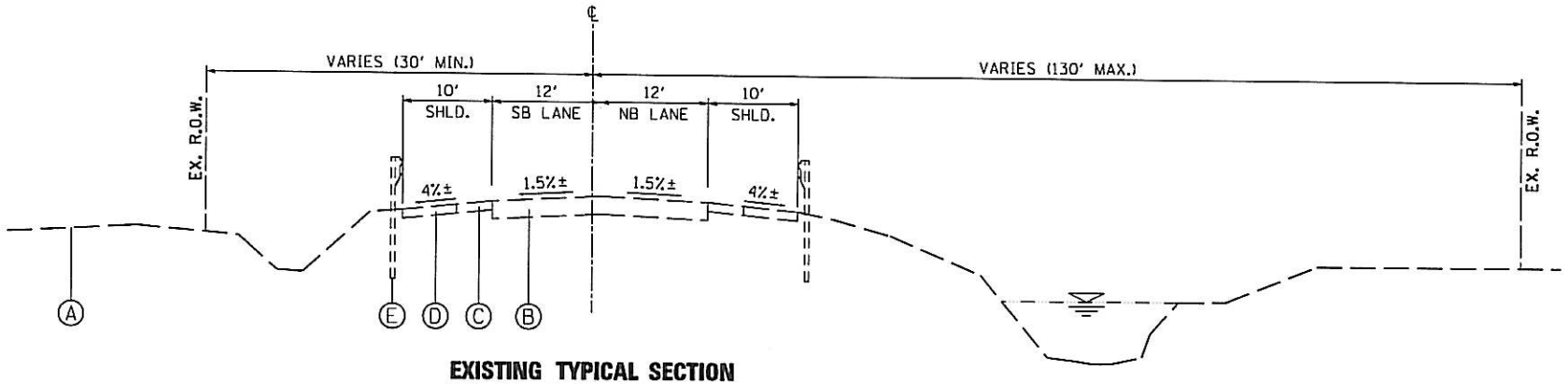

EXISTING TYPICAL SECTION
STA. 19+35 TO STA. 20+80
(BRIDGE APPROACHES)

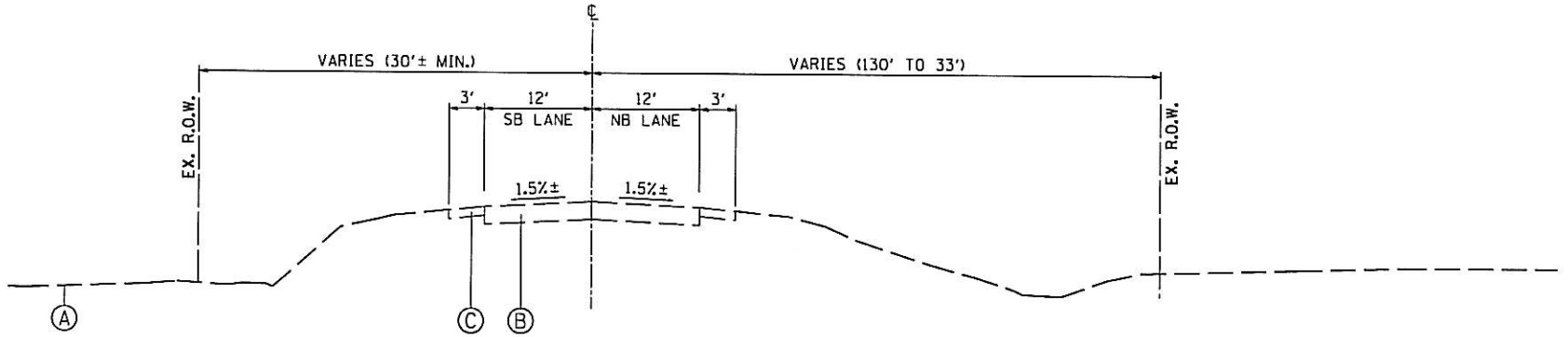

EXISTING TYPICAL SECTION
STA. 15+00 TO STA. 19+35
STA. 20+80 TO STA. 24+55

WILLS BURKE KELSEY ASSOCIATES LTD.
116 West Main Street, Suite 201
St. Charles, Illinois 60174
(630) 443-7755

LEGEND

- (A) GROUND
- (B) PAVEMENT, HOT-MIX ASPHALT
- (C) SHOULDER, AGGREGATE
- (D) SHOULDER, HOT-MIX ASPHALT
- (E) GUARDRAIL

EXISTING TYPICAL SECTION

FRENCH RD. OVER BURLINGTON CREEK
KANE COUNTY
SEC. 08-00386-00-BR

EXHIBIT 2

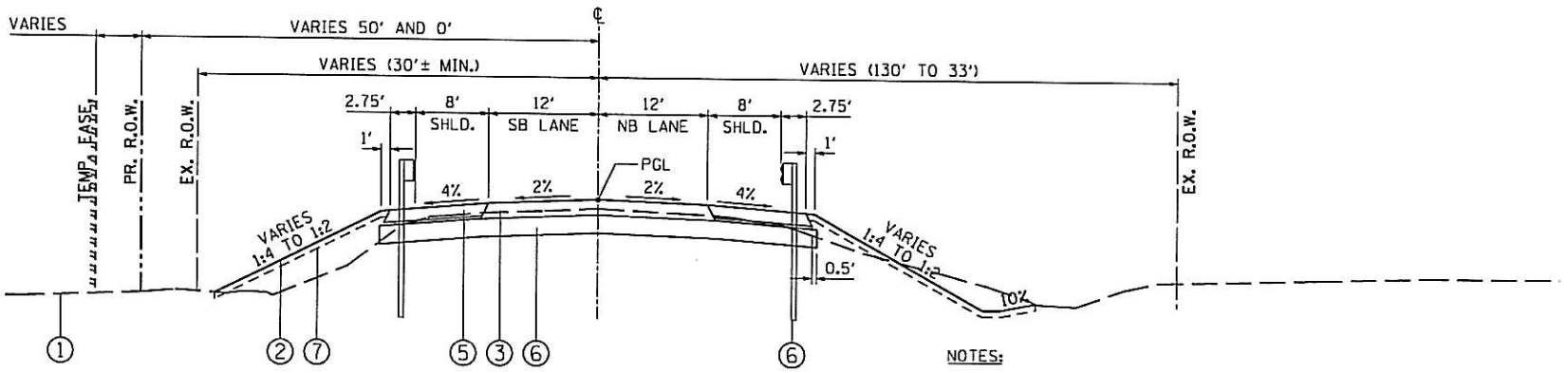

PROPOSED TYPICAL SECTION
STA. 20+49.38 TO STA. 21+40 (+/-)

NOTES:

1. PORTIONS OD THE DICHES ARE TO BE OVERSIZED FOR COMPENSATORY STORAGE.

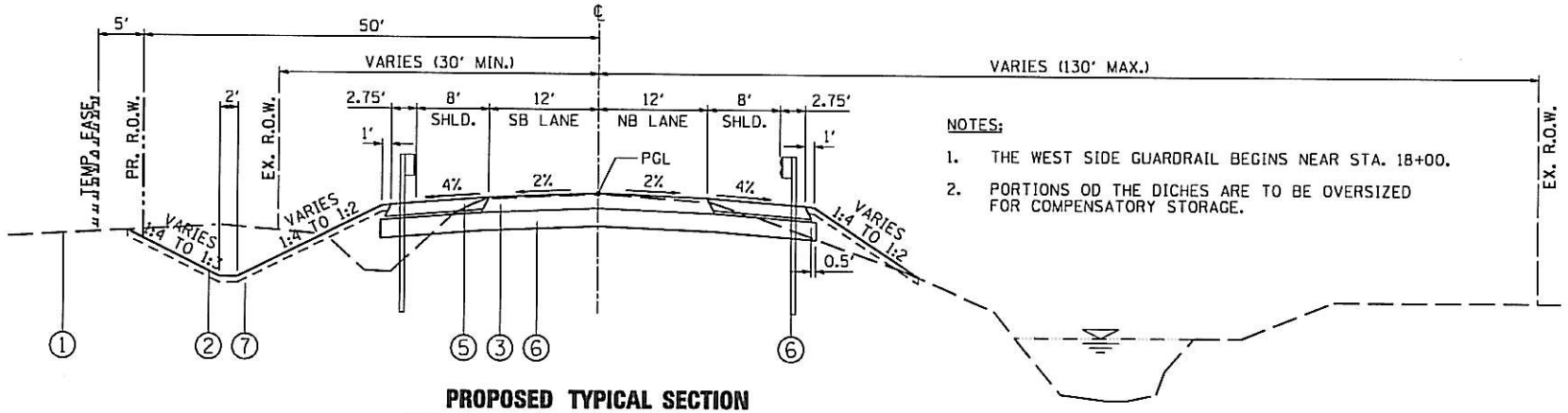

PROPOSED TYPICAL SECTION
STA. 15+00 (+/-) TO STA. 19+75.38

NOTES:

1. THE WEST SIDE GUARDRAIL BEGINS NEAR STA. 18+00.
2. PORTIONS OD THE DICHES ARE TO BE OVERSIZED FOR COMPENSATORY STORAGE.

WILLS BURKE KELSEY ASSOCIATES LTD.
116 West Main Street, Suite 201
St. Charles, Illinois 60174
(630) 443-7755

LEGEND

① EXISTING GROUND	⑤ SHOULDER, HOT-MIX ASPHALT
② PROPOSED GROUND	⑥ AGGREGATE BASE COURSE
③ PAVEMENT, HOT-MIX ASPHALT	⑦ TOPSOIL
④ SHOULDER, AGGREGATE	⑧ GUARDRAIL

PROPOSED TYPICAL SECTIONS

FRENCH RD. OVER BURLINGTON CREEK
KANE COUNTY
SEC. 08-00386-00-BR

EXHIBIT 3A

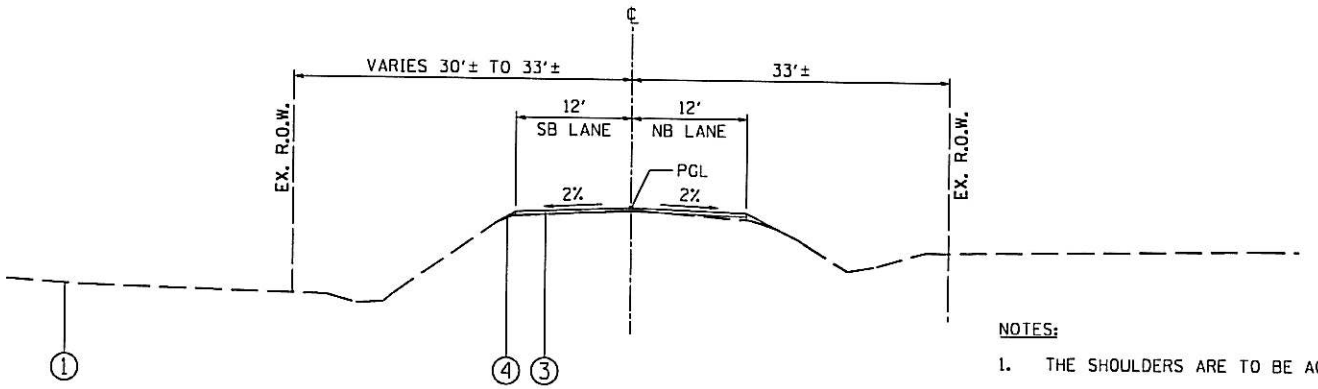

PROPOSED TYPICAL SECTION
STA. 13+35 TO STA. 15+00 (+/-)
STA. 21+40 (+/-) TO STA. 24+55

NOTES:

1. THE SHOULDERS ARE TO BE AGGREGATE WEDGE SHOULDERS.
2. THE EXISTING PAVEMENT SURFACE IS TO BE MILLED SO THAT THE PROPER MINIMUM SURFACE COURSE DEPTH CAN BE LAID.

WILLS BURKE KELSEY ASSOCIATES LTD.
116 West Main Street, Suite 201
St. Charles, Illinois 60174
(630) 443-7755

LEGEND

1. EXISTING GROUND
2. PROPOSED GROUND
3. PAVEMENT, HOT-MIX ASPHALT
4. SHOULDER, AGGREGATE
5. SHOULDER, HOT-MIX ASPHALT
6. AGGREGATE BASE COURSE
7. TOPSOIL
8. GUARDRAIL

PROPOSED TYPICAL SECTIONS

FRENCH RD. OVER BURLINGTON CREEK
KANE COUNTY
SEC. 08-00386-00-BR

EXHIBIT 3B

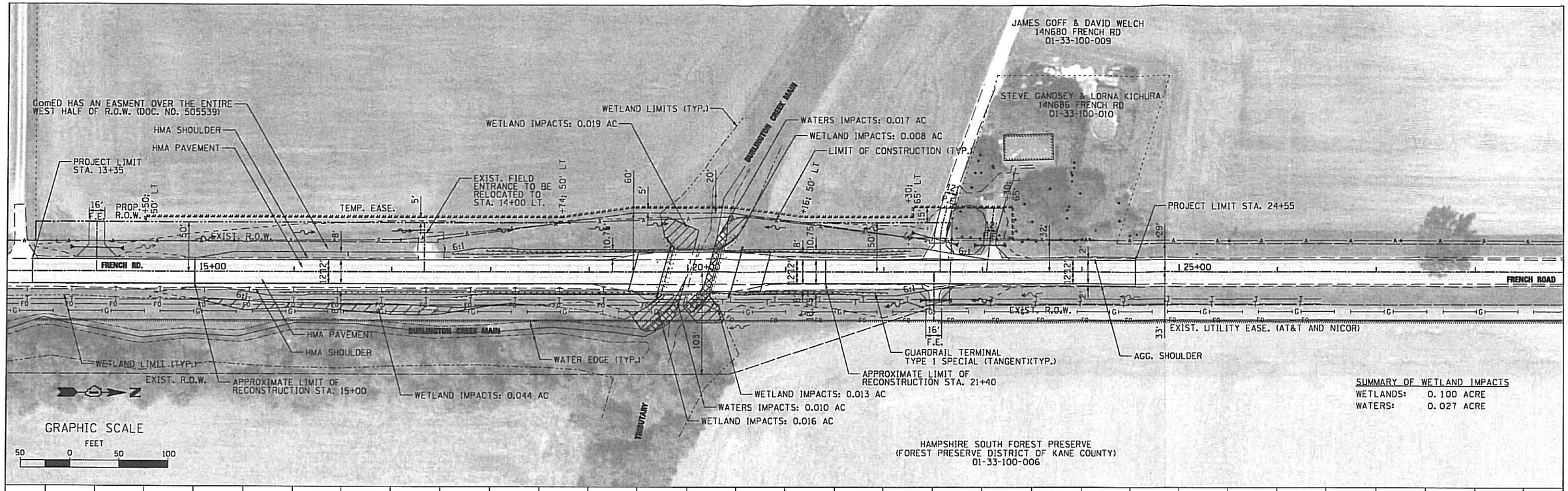

FILE NAME = P:\CBBEL WEST Projects\2009\09-0057 French\Civil\Dgn\Exhibits\PDR_Exhibit04_PlanProf.dgn

WILLS BURKE KELSEY ASSOCIATES LTD. 118 West Main Street, Suite 201 St. Charles, Illinois 60174 (630) 443-7755	USER NAME = *USER*	DESIGNED - KMA	REVISED -
		DRAWN - KMA / NDP	REVISED -
	PLOT SCALE =	CHECKED - SBP	REVISED -
	PLOT DATE = 12/8/2011	DATE - 12/19/11	REVISED -

STATE OF ILLINOIS
DEPARTMENT OF TRANSPORTATION

FRENCH ROAD OVER BURLINGTON CREEK
PLAN AND PROFILE

SCALE: 1"=50' | SHEET NO. 1 OF 1 SHEETS | STA. 15+00 TO STA. 24+55

F.A.S. RTE.	SECTION	COUNTY	TOTAL SHEETS	SHEET NO.
0099	08-00386-00-BR	KANE	1	1

EXHIBIT 4

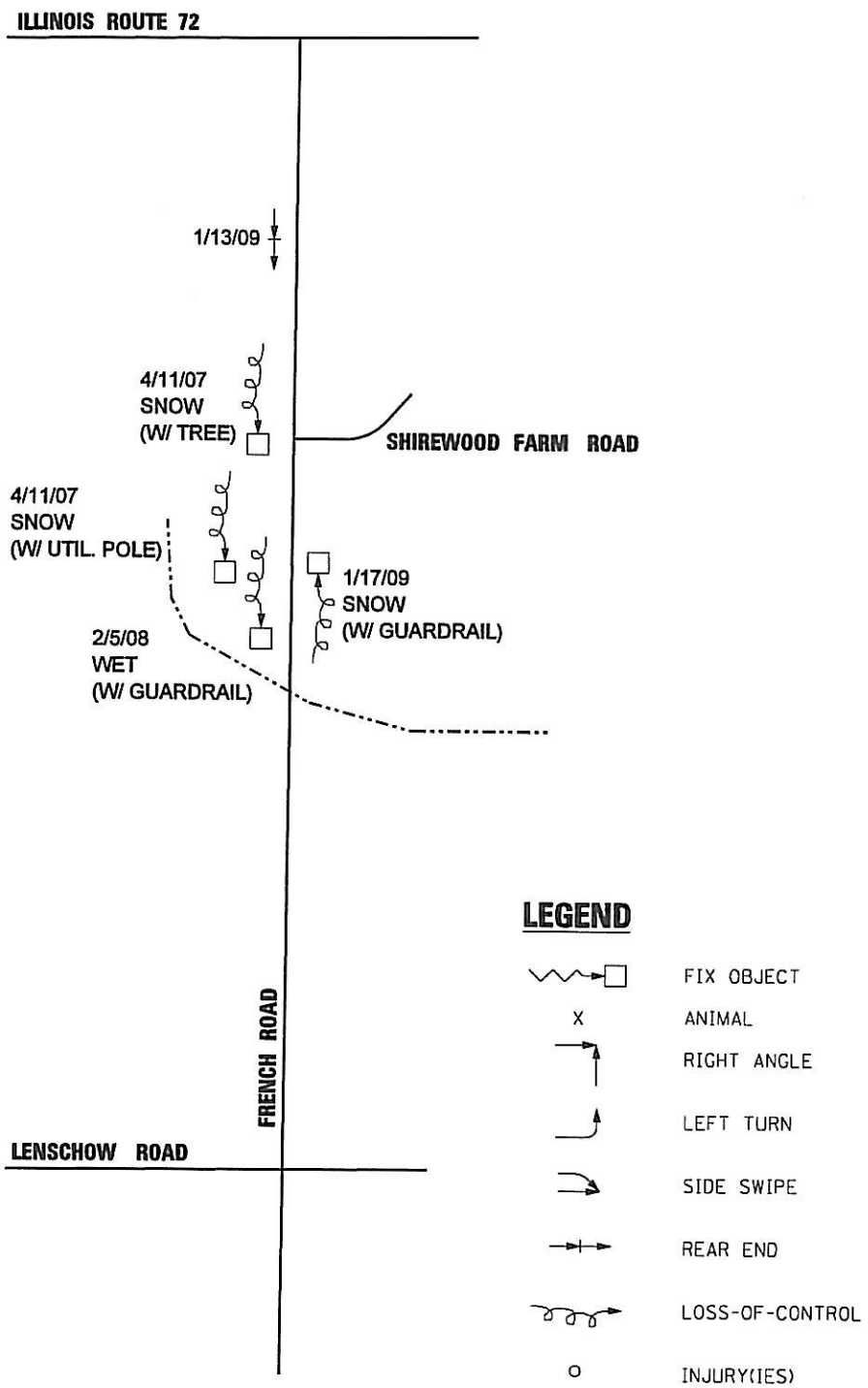

WILLS BURKE KELSEY ASSOCIATES LTD.
116 West Main Street, Suite 201
St. Charles, Illinois 60174
(630) 443-7755

N

0 mi. 1/4 mi.

CRASH LOCATIONS

FRENCH RD. OVER BURLINGTON CREEK
KANE COUNTY
SEC. 08-00386-00-BR

EXHIBIT 5

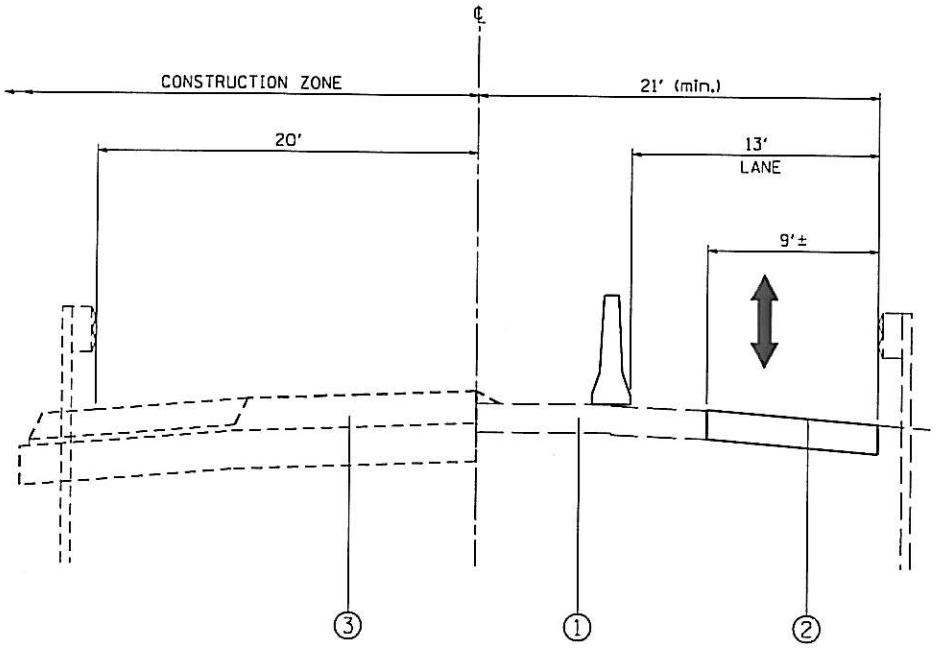

PROPOSED TYPICAL SECTION
STAGE 1

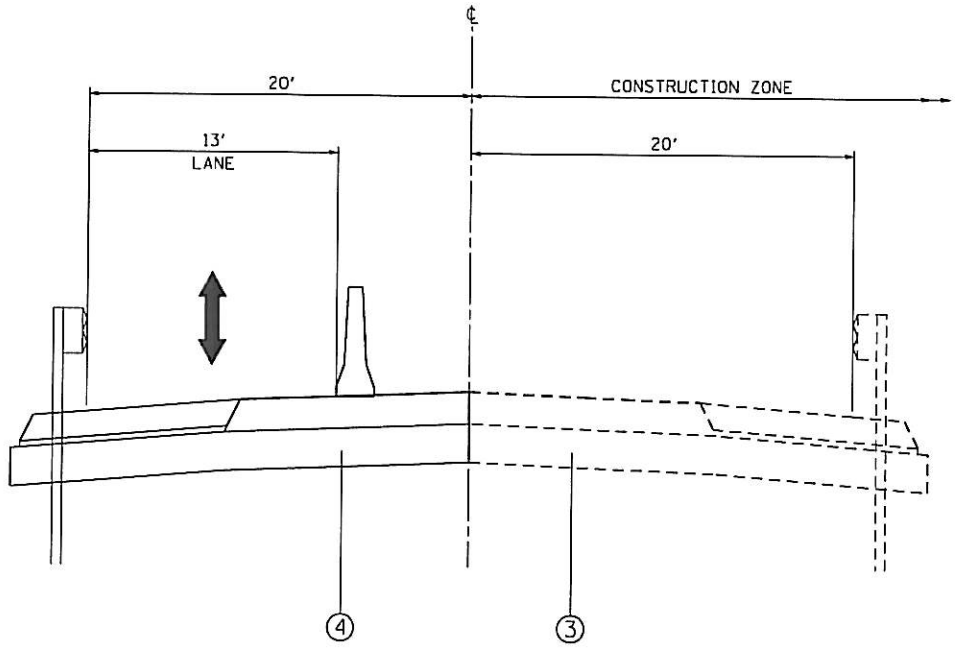

PROPOSED TYPICAL SECTION
STAGE 2

WILLS BURKE KELSEY ASSOCIATES LTD.
116 West Main Street, Suite 201
St. Charles, Illinois 60174
(630) 443-7755

LEGEND

1. EXISTING PAVEMENT
2. TEMPORARY PAVEMENT
3. PAVEMENT UNDER CONSTRUCTION
4. COMPLETED PAVEMENT

PROPOSED M.O.T. TYPICAL SECTIONS

FRENCH RD. OVER BURLINGTON CREEK
KANE COUNTY
SEC. 08-00386-00-BR

EXHIBIT 6

ENGINEER'S OPINION OF PROBABLY CONSTRUCTION COSTS
FRENCH ROAD OVER BURLINGTON CREEK

CODE	DESCRIPTION	UNIT	QUANTITY	UNIT COST	TOTAL COST
20200100	EARTH EXCAVATION	CU YD	1,410	$20	$28,200
20201200	REMOVAL AND DISPOSAL OF UNSUITABLE MATERIAL	CU YD	1,135	$25	$28,375
20300100	CHANNEL EXCAVATION	CU YD	300	$20	$6,000
20400800	FURNISHED EXCAVATION	CU YD	50	$20	$1,000
20800150	TRENCH BACKFILL	CU YD	40	$35	$1,400
21001000	GEOTECHNICAL FABRIC FOR GROUND STABILIZATION	SQ YD	1,200	$2	$2,400
21101625	TOPSOIL FURNISH AND PLACE, 6"	SQ YD	4,840	$7	$33,880
25000100	SEEDING, CLASS 1	ACRE	1	$2,300	$2,300
28100107	STONE RIPRAP, CLASS A4	SQ YD	521	$75	$39,075
28200200	FILTER FABRIC	SQ YD	521	$2	$1,042
35102000	AGGREGATE BASE COURSE, TYPE B 8"	SQ YD	120	$12	$1,440
35501308	HOT-MIX ASPHALT BASE COURSE, 6"	SQ YD	180	$30	$5,400
35501318	HOT-MIX ASPHALT BASE COURSE, 8 1/2"	SQ YD	1,350	$38	$51,300
40600625	LEVELING BINDER (MACHINE METHOD), N50	TON	100	$90	$9,000
40603335	HOT-MIX ASPHALT SURFACE COURSE, MIX "D", N50	TON	330	$90	$29,700
42001430	BRIDGE APPROACH PAVEMENT CONNECTOR (FLEXIBLE)	SQ YD	90	$130	$11,700
44000100	PAVEMENT REMOVAL	SQ YD	2,330	$13	$30,290
44000157	HOT-MIX ASPHALT SURFACE REMOVAL, 2"	SQ YD	450	$4	$1,800
44000200	DRIVEWAY PAVEMENT REMOVAL	SQ YD	340	$11	$3,740
48203029	HOT-MIX ASPHALT SHOULDERS, 8"	SQ YD	1,420	$42	$59,640
50100100	REMOVAL OF EXISTING STRUCTURES	EACH	1	$50,000	$50,000
50105220	PIPE CULVERT REMOVAL	FOOT	120	$12	$1,440
50200100	STRUCTURE EXCAVATION	CU YD	183	$40	$7,320
50300225	CONCRETE STRUCTURES	CU YD	58	$650	$37,700
50300255	CONCRETE SUPERSTRUCTURE	CU YD	215	$750	$161,250
50300260	BRIDGE DECK GROOVING	SQ YD	600	$5	$3,000
50300280	CONCRETE ENCASEMENT	CU YD	3.5	$600	$2,100
50300300	PROTECTIVE COAT	SQ YD	600	$2	$1,200
50500105	FURNISHING & ERECTING STRUCTURAL STEEL	L SUM	1	$115,000	$115,000
50800205	REINFORCEMENT BARS, EPOXY COATED	POUND	54,600	$1.50	$81,900
50901050	STEEL RAILING, TYPE SM	FOOT	208	$135	$28,080
51201xxx	FURNISHING STEEL PILES HP	FOOT	1,170	$55	$64,350
51202305	DRIVING PILES	FOOT	1,170	$1	$1,170
51203xxx	TEST PILE HP	EACH	2	$5,000	$10,000
51500100	NAME PLATES	EACH	1	$500	$500
54213660	PRECAST REINFORCED CONCRETE FLARED END SECTIONS 15"	EACH	8	$570	$4,560
54247100	GRATING FOR CONCRETE FLARED END SECTION 15"	EACH	8	$260	$2,080
550A0090	STORM SEWERS, CLASS A, TYPE 1 18"	FOOT	166	$44	$7,304
63000001	STEEL PLATE BEAM GUARDRAIL, TYPE A, 6 FOOT POSTS	FOOT	475	$21	$9,975
63100087	TRAFFIC BARRIER TERMINAL, TYPE 6A	EACH	4	$3,200	$12,800
63100167	TRAFFIC BARRIER TERMINAL, TYPE 1 (SPECIAL) TANGENT	EACH	4	$2,470	$9,880
63200310	GUARDRAIL REMOVAL	FOOT	775	$6	$4,650
67000400	ENGINEER'S FIELD OFFICE, TYPE A	CAL MO	8	$1,850	$14,800
67100100	MOBILIZATION (4% of TOTAL)	L SUM	1	$50,480	$50,480
70100405	TRAFFIC CONTROL AND PROTECTION, STANDARD 701321	EACH	1	$15,000	$15,000
70100450	TRAFFIC CONTROL AND PROTECTION, STANDARD 701201	L SUM	1	$4,000	$4,000
70100460	TRAFFIC CONTROL AND PROTECTION, STANDARD 701306	L SUM	1	$7,000	$7,000
70106500	TEMPORARY BRIDGE TRAFFIC SIGNALS	EACH	1	$20,000	$20,000
70400100	TEMPORARY CONCRETE BARRIER	FOOT	720	$25	$18,000
70400200	RELOCATE TEMPORARY CONCRETE BARRIER	FOOT	720	$6	$4,320
78008210	POLYUREA PAVEMENT MARKING TYPE I - LINE 4"	FOOT	4,480	$2	$8,960
X0326806	WASHOUT BASIN	L SUM	1	$5,000	$5,000
Z0001050	AGGREGATE SUBGRADE 12"	SQ YD	2,860	$13	$37,180
	Sub-Total				**$1,148,681**

EXHIBIT 7

ENGINEER'S OPINION OF PROBABLY CONSTRUCTION COSTS
FRENCH ROAD OVER BURLINGTON CREEK

CODE	DESCRIPTION	UNIT	QUANTITY	UNIT COST	TOTAL COST
	Total from Page 1				$1,148,681
Z0013797	STABILIZED CONSTRUCTION ENTRANCE	SQ YD	110	$12	$1,320
Z0013798	CONSTRUCTION LAYOUT	L SUM	1	$15,000	$15,000
Z0026407	TEMPORARY SHEET PILING	SQ FT	700	$50	$35,000
Z0042002	POROUS GRANULAR EMBANKMENT, SUBGRADE	CU YD	400	$30	$12,000
Z0062456	TEMPORARY PAVEMENT	SQ YD	1,000	$50	$50,000
	Sub-Total				**$1,262,001**
	Undeveloped Design Details (15%)				**$189,300**
	Utility Relocation (See Below)				**$120,000**
	TOTAL (Rounded)				**$1,571,000**

ESTIMATE OF UTILITY RELOCATION COST

Relocate ComED Power Poles	EACH	2	$10,000	$20,000
Temporary De-Energizing of Overhead Power During Bridge Replacement Activities	L SUM	1	$10,000	$10,000
Relocate Gas Main	FOOT	300	$100	$30,000
Relocate AT&T Fiber Optic	FOOT	300	$100	$30,000
Relocate AT&T Copper Wire	FOOT	300	$100	$30,000
	UTILITY RELOCATION TOTAL			**$120,000**

EXHIBIT 7

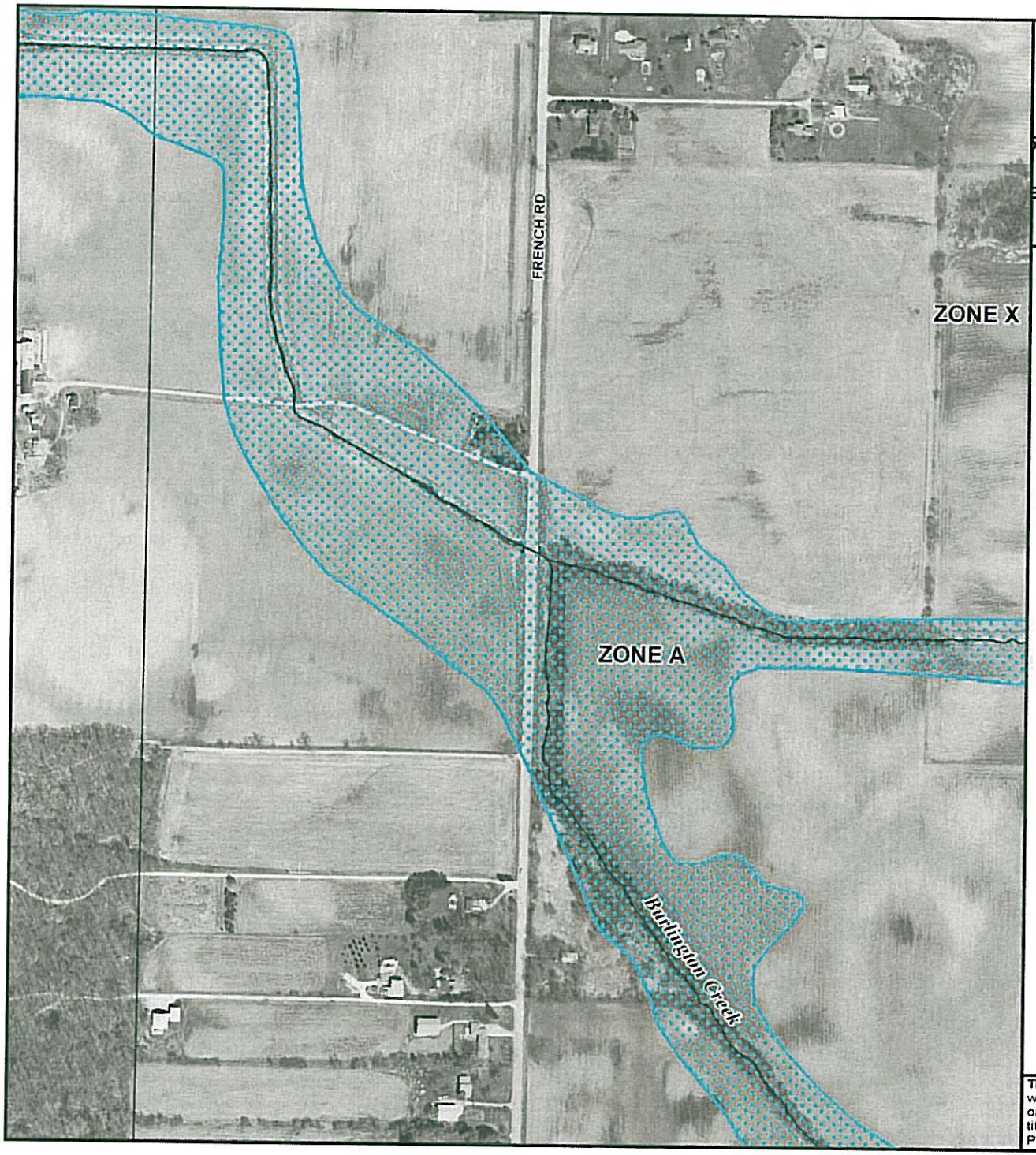

MAP SCALE 1" = 500'

50 0 500 1000 FEET

METE

NFIP

NATIONAL FLOOD INSURANCE PROGRAM

PANEL 0108H

FIRM

FLOOD INSURANCE RATE MAP

KANE COUNTY, ILLINOIS

AND INCORPORATED AREAS

PANEL 108 OF 410

(SEE MAP INDEX FOR FIRM PANEL LAYOUT)

CONTAINS:

COMMUNITY	NUMBER	PANEL	SUFFIX
HAMPSHIRE, VILLAGE OF	170327	0108	H
KANE COUNTY	170896	0108	H

Notice to User: The **Map Number** shown below should be used when placing map orders; the **Community Number** shown above should be used on insurance applications for the subject community.

MAP NUMBER
17089C0108H

MAP REVISED
AUGUST 3, 2009

Federal Emergency Management Agency

This is an official copy of a portion of the above referenced flood map. It was extracted using F-MIT On-Line. This map does not reflect changes or amendments which may have been made subsequent to the date on the title block. For the latest product information about National Flood Insurance Program flood maps check the FEMA Flood Map Store at www.msc.fema.gov

EXHIBIT 8

EXHIBIT 9
SUMMARY OF EASEMENT ACQUISITION

PARCEL NUMBER (PIN)	OWNER	PARCEL ADDRESS	USE / BLDG	PURPOSE	WIDTH OF TAKING	TEMPORARY EASEMENT		PERMANENT RIGHT-OF-WAY	
					FT	SF	ACRES	SF	ACRES
01-33-100-009	James Goff and David Welch	14N680 French Road, Hampshire IL	Farm	Accomdation of Ditches and grading	20' (and varies)	4,511	0.104	10,640	0.244
01-33-100-010	Steve Gandsey and Lorna Kichura	14N686 French Road, Hampshire IL	Single Family House	Grading and driveway construction	N/A	2,072	0.048	0	0.000
					TOTAL	**6,583**	**0.151**	**10,640**	**0.244**

APPENDIX A

CMAP CORRESPONDENCE

Chicago Metropolitan
Agency for Planning

233 South Wacker Drive
Suite 800
Chicago, Illinois 60606

312 454 0400
www.cmap.illinois.gov

September 16, 2011

Mr. Carl Schoedel. P.E.
County Engineer
Kane County Division of Transportation
41W011 Burlington Road
St. Charles, IL 60504

Subject: ***Bridge Replacements - Bliss Road, Walker Road and French Road***
Kane County DOT

Dear Mr. Schoedel:

In response to a request made on your behalf and dated September 14, 2011, we have developed year 2040 average daily traffic (ADT) projections for the subject locations.

ROAD SEGMENT	2040 ADT
Bliss Rd over Blackberry Creek	12,000
Walker Rd over Burlington Creek	6,000
French Rd over Burlington Creek	7,000

Traffic projections are developed using existing ADT data provided in the request letter and the results from the April 2011 CMAP RTP/TIP Travel Demand Analysis. The regional travel model uses CMAP 2040 socioeconomic projections and assumes the implementation of the 2040 Regional Transportation Plan for the Northeastern Illinois area.

If you have any questions, please call Jose Rodriguez at (312) 386-8806.

Sincerely,

Donald P. Kopec
Deputy Director for Planning and Programming

RECEIVED
SEP 2 0 2011
Wills Burke Kelsey Associates

cc: Anderson (Wills Burke Kelsey)
M:\proj1\ceb\forecasts\2011 Response\ka-11-11.docx

APPENDIX B

ENVIRONMENTAL COORDINATION

Project Overview

Submittal Date: 10/01/2010 **Sequence No:** 16136
District: 1 **Requesting Agency:** Local Kane Co. DOT **Project No:**
Contract #: **Job No.:** P- 91-270-09
Counties: Kane
Route: FAS 0099 **Marked:** CH 11
Street: French Road **Section:** 08-00386-00-BR
Municipality(ies): Unincorporated **Project Length:** 0.4828 km 0.3 miles
FromTo (At): Burlington Creek
Quadrangle: Hampshire **Township-Range-Section:** T42N R6E Sec. 33
Survey Target Date: **Anticipated Design Appr.:** 09/15/2011 **Anticipated Processing:** CE
Funding: ☑ Federal ☐ State ☐ TBP ☐ MFT ☐ Local Non-MFT

Consultant:
PTB No.: **Item No.:** **PTB Date:** **Prequal Level:**

Sequence No: 16136

	Biological	Wetlands	Cultural	Special Waste
Entered By	BDE	BDE	BDE	
Cleared for DA	12/5/2011	12/5/2011	1/27/2011	
Cleared for Letting	12/5/2011	12/5/2011	1/27/2011	
Resubmittal				
ResubmittalCleared				

Section: 08-00386-00-BR **Job No.:** P- 91-270-09
FromTo (At): Burlington Creek

Notice of Intent	Project Initiation Ltr to FHWA	Public Info Meeting(s)		Notice of Availability		Public Hearing	Draft	ROD/FONSI
		1st	2nd	Draft	Final			Approved

Project Phase Comments:

Attention: Central Office BD&E
Environment Section
Room 330

Environmental Survey Request

A. Project Information ☑ Bio ☑ Cultural ☑ Wetlands ☐ Special Waste

Submittal Date: 10/01/2010 Sequence No: 16136
District: 1 Requesting Agency: Local Kane Co. DOT Project No:
Contract #: Job No.: P- 91-270-09
Counties: Kane
Route: FAS 0099 Marked: CH 11
Street: French Road Section: 08-00386-00-BR
Municipality(ies) Unincorporated Project Length: 0.483 km 0.3 miles
FromTo (At): Burlington Creek
Quadrangle: Hampshire Township-Range-Section: T42N R6E Sec. 33
Survey Target Date: Anticipated Design Approval: 09/15/2011

B. Reason for Submittal: (Check all that apply)

☑ Acquisition of additional ROW or easement 0.6070275 ha/ 1.5 acres
☑ In-Stream Work Stream Name: Burlington Creek
☐ Other:

C. Project Description: The project will replace the two lane bridge over Burlington Creek. The approach roadways will be improved from touchdown-to-touchdown. The embankment will be raised to provide the required freeboard between the low chord and the base flood elevation.

Proposed Work: ☑ Highway ☑ Bridge ☐ Bike Trail ☐ Other

D. Tree Removal?: Don't Know Number?: ha/ acres
Existing Bridge(s) Structure Number: 045-3004 On Historic Bridge List: No
Historic District Involved? No Historic Buildings Involved? No
Section 4(f) Lands Involved? Yes Section 6(f) Lands Involved? Don't Know
Wetland delineation performed by: Consultant End. Species Consultation performed by: BDE

E. Funding: ☑ Federal ☐ State ☐ TBP ☐ MFT ☐ Local Non-MFT
☐ 404 Permit Required Anticipated Processing: CE

F.
Contact Person: Marilin Solomon
Telephone #: (847) 705-4407 ext.
Env.Contact:
Telephone #:
Local Contact Person: Mike Zakosek
Telephone #: (630) 406-7346 ext.
E-Mail: zakosekmike@co.kane.il.us
Title/Company:

☐ Field Sign Off (Bio & Cultural Only) ☑ Received in CO 10/20/2010 ☐ SW Received

BIOLOGICAL RESOURCES
NO SURVEY OR FURTHER COORDINATION REQUIRED
SIGNED Thomas C Brady JMV 12-5-11 DATE

Illinois Department of Transportation

Memorandum

To:	Darrell W. Lewis		
From:	Scott E. Stitt	By:	Thomas C. Brooks Thomas C Brooks
Subject:	Biological Resources Review		
Date:	December 5, 2011		

FAS 0099 (CH 11) French Road
At Burlington Creek
Section: P-91-270-09
BDE Seq. No.: 16136
Kane County

The Natural Resources Unit has reviewed this project. The project, as described on the Environmental Survey Request Form, does not require biological surveys. The IDNR Natural Resources Review Tool has no records of listed species, natural areas or nature preserves within the project corridor (IDNR NRRT/WRRT report dated October 26, 2010). In accordance with the 2011 Memorandum of Understanding by and between IDNR and IDOT, consultation is terminated.

A preliminary review was performed of the project area for the potential impact on threatened or endangered species pursuant to Section 7 of the Endangered Species Act as amended. The U.S. Fish and Wildlife Service Region 3 list of threatened or endangered species in Illinois (http://www.fws.gov/midwest/endangered/lists/illinois-cty.html) lists the Eastern prairie fringed orchid (*Platanthera leucophaea*) as occurring in Kane County.

The federally threatened and Illinois endangered Eastern prairie fringed orchid is a plant of open-canopied mesic to wet prairies and wetlands. There is no prairie or high quality wetland (FQI at or above 20 or native mean C of 3.5 or greater) within the project area. Therefore, we conclude absence of the Eastern prairie fringed orchid in the project area.

This office has determined that there will be no effect to the species listed for Kane County, Illinois, as described above. Please keep this memorandum in your project files as it documents and concludes consultation with the IDNR and USFWS.

This office has received the Wetland Assessment Report and the Wetland Impact Evaluation (WIE) form was submitted for the project and finds the information to be satisfactory with regards to the IWPA and department policy.

Based on the information submitted, a total of 0.132 acre of wetlands from five wetland sites (Site W1, 1, 2, 3 and 4) will be permanently impacted by fill as a result of this project.

Wetland Site W1 is Burlington Creek. The creek branches on the east side of French Road, from the south and the east. An anticipated 0.02 acre of this 0.39 acre wetland will be impacted as a result of this project.

Wetland Site 1 is a wet meadow located on the northwest side of the intersection of French Road and Burlington Creek. This wetland has an FQI of 1.1, indicating very low natural quality. An anticipated 0.003 acre of this 0.06 acre wetland will be impacted as a result of this project.

Wetland Site 2 is a wet meadow located on the southwest side of the intersection of French Road and Burlington Creek. This wetland has an FQI of 2.0, indicating very low natural quality. An anticipated 0.043 acre of this 0.09 acre wetland will be impacted as a result of this project.

Wetland Site 3 is a wet meadow located on the southeast side of the intersection of French Road and Burlington Creek. This wetland has an FQI of 2.2, indicating very low natural quality. An anticipated 0.053 acre of this 1.12 acre wetland will be impacted as a result of this project.

Wetland Site 4 is a wet meadow located on the northeast side of the intersection of French Road and Burlington Creek. This wetland has an FQI of 1.9, indicating very low natural quality. An anticipated 0.013 acre of this 0.11 acre wetland will be impacted as a result of this project.

Mitigation for the wetland impacts has been proposed to occur at an in-basin wetland mitigation bank site. We concur with that form of mitigation. A mitigation ratio of 1.5:1.0 will be applied, thus requiring 0.198 acres of wetland credits to be purchased. Please note that credits must be purchased prior to construction.

With regards to wetlands, this project is clear for letting.

By agreement, no coordination with the Illinois Department of Natural Resources and the U.S. Fish and Wildlife Service is necessary.

JMV

Illinois Department of Transportation

Memorandum

To:	Darrell Lewis	Attn: Salmon Danmole
From:	Scott E. Stitt	By: J. A. Walthall
Subject:	Cultural Resource Concurrence	
Date:	January 27, 2010	

Kane County
FAS 0099, CH 11
Sec. 08-00386-00-BR
Seq. #16136

Attached is a letter of concurrence from the State Historic Preservation Officer indicating that the proposed project referenced above will have no effect on significant cultural resources.

This completes the necessary coordination relative to evaluating the impact of this project on significant cultural resources.

Attachment

JAW:km

Illinois Department of Transportation
2300 South Dirksen Parkway / Springfield, Illinois / 62764

January 21, 2011

Kane County
FAS 0099, CH 11
Burlington Creek
Section: 08-00386-00-BR

IDOT Seq. # 16136
ISAS# 10202

FEDERAL 106 PROJECT

NO HISTORIC PROPERTIES AFFECTED

Ms. Anne Haaker
Deputy State Historic Preservation Officer
Illinois Historic Preservation Agency
Springfield, Illinois 62701

Dear Ms. Haaker:

Attached is a report from the Illinois State Archaeological Survey concerning the results of survey of the 2 acre project area referenced above. No archaeological, architectural, or historic sites were identified within the proposed project rights-of way.

In accordance with the established procedure for coordination of proposed Illinois Department of Transportation projects, we request the concurrence of the State Historic Preservation Officer in our determination that no historic properties, subject to protection under Section 106 of the National Historic Preservation Act of 1966 as amended, will be affected by the proposed construction activities.

Very truly yours,

John A. Walthall, PhD
Cultural Resources Unit

CONCUR

By: Anne E. Haaker
Deputy State Historic Preservation Officer

Date: 1/25/11

APPENDIX C

STRUCTURAL AND HYDRAULIC APPROVALS

Structure Number: 045-0040 **District:** 1

Inventory Data

Facility Carried:	FRENCH RD	Bridge Name:	
Feature Crossed:	BURLINGTON CREEK	Location:	0.9 MI S IL 72
Bridge Remarks:			
Bridge Status:	1 OPEN - NO RESTRICT	StatusDate:	04/1988
Status Remarks:			
Maint County:	045 KANE	Maint Township:	10 HAMPSHIRE
Maint Responsibility:	03 COUNTY		
Service On/Under:	1 HIGHWAY	/ 5	WATERWAY
Reporting Agency:	3 COUNTY		
Main Span Matl/Type:	5 PRESTRESS CONCRETE	/ 05	BOX BEAM OR GIRDER-MULTIPLE
Nbr Of Main Spans:	1	Nbr Of Approach Spans:	0
Approaches			
Near #1 Matl/Type:	/		
Near #2 Matl/Type:	/		
Far #1 Matl/Type:	/		
Far #2 Matl/Type:	/		
Median Width/Type:	0 Ft. / 0 None		
Guardrail Type L/R:	0 None	/ 0	None
Toll Facility Indicator	0 No Toll		
Latitude:	42 D 04 M 32.81 S	Longitude:	88 D 32 M 40.60 S
Deck Structure Type	E PCAST PRES CN DK BM	Deck Structure Thickness:	21.0 SD: FO:
Sidewalks Under Structure:	0 None		

Sufficiency Rating:	49.1	Structure Length:	50.5
HBP Eligible:	Yes	AASHTO Bridge Length:	46.0
Replaced By:	000-0000	Length of Long Span:	48.0
Replaces:	000-0000	Bridge Roadway Width:	42.1
Last Update Date:	03/21/2011	Appr Roadway Width:	30.0
Parallel Structure:	None	Deck Width:	46.5
Multi-Level Structure Nbr:		Sidewalk Width Right:	0.0
Skew Direction:	Left	Sidewalk Width Left:	0.0
Skew Angle:	15 D 00 M 00 S	Navigation Control:	0 No
Structure Flared:	No	Navigation Horiz Clear:	0
Historical Significance:	No	Navigation Vert Clear:	0
Border Bridge State:		Culvert Fill Depth:	0.0
Bdr State SN:		Number Culvert Cells:	0
Bdr State % Responsibility:	0	Culvert Opening Area:	0.0
Structural Steel Wt	0	Culvert Cell Height:	0.00
Substructure Material:	5N	Culvert Cell Width:	0.00

Rated By: 2 IDOT Rate Method: 1 LOAD FACTOR
Inventory Rating: 10.4 (219) Load Rating Date: 02/04/2009
Operating Rating: 17.5 (232)
Design Load: 02 HS20

Railroad Crossing Info
Crossing 1 Nbr:
Crossing 1 Nbr:
RR Lateral Underclear: 00.0
RR Vertical Underclear: 00 Ft 00 In

Key Route On Data

Key Route Nbr:	FEDERAL-AID URBAN 2331	Station:	000.860
Appurtenances	Main Route 00.000	Segment:	
Inventory County:	045 KANE	Linked:	Y
Township/Road Dist	10 HAMPSHIRE	Natl. Hwy System:	Not on NHS
Municipality	0000	Inventory Direction:	
Urban Area:	1051	Curr AADT Yr/Count:	2010 / 2550
Functional Class:	70 MINOR ARTERIAL (URBAN)	Est Truck Percentage:	9 %
** CLEARANCES **	South/East North/West	Number Of Lanes:	2
Max Rdwy Width:	044.1	One Or Two Way:	2 Two-Way
Horizontal:	044.1 000.0	Bypass Length:	3
Min Vertical:	99 Ft 11 In 00 Ft 00 In	Future AADT Yr/Cnt:	2021 / 2340
10 Ft Vertical:	99 Ft 11 In 00 Ft 00 In	Designated Truck Rte:	NONE
Lateral:		Special Systems:	No

Key Route Under Data

		Station:	
		Segment:	
		Linked:	
		Natl. Hwy System:	
		Inventory Direction:	
		Curr AADT Yr/Count:	/
		Est Truck Percentage:	%
South/East	North/West	Number Of Lanes:	
		One Or Two Way:	
Ft In	Ft In	Bypass Length:	
Ft In	Ft In	Future AADT Yr/Cnt:	/
Ft	Ft	Designated Truck Rte:	
		Special Systems:	

*** Marked Route On Data ***

	Designation	Kind	Number
Route #1:	1 Mainline	8 Other	2331
Route #2:			
Route #3:			

*** Marked Route Under Data ***

	Designation	Kind	Number
Route #1:			
Route #2:			
Route #3:			

Structure Number: 045-0040 **District:** 1

Data Related to Inspection Information

***Inspection Intervals ***
Routine NBIS: 24 MOS Underwater: 0 MOS
Fracture Critical: 0 MOS Special: N

*** Maximum Allowable Posting Limits ***
One Truck At A Time:
Single Unit Vehicles: Tons
Combination Type 3S-1: Tons
Combination Type 3S-2: 33 Tons

Bridge Posting Level: 4 < 10% Below Legal Loads

Inspection/Appraisal Information

Inspection Date: 02/22/2011 Inspection Temperature: 27 Deg. F

Deck:	4	POOR CONDITION - ADVANCED DETERIORATION
Superstructure:	4	POOR CONDITION - ADVANCED DETERIORATION
Substructure:	6	SATISFACTORY CONDITION - MINOR DETERIORATIO
Culvert:	N	NOT APPLICABLE
Channel and Protection:	6	SATISFACTORY CONDITION - MINOR DETERIORATIO
Structural Evaluation:	4	MINIMUM ADEQUACY TO BE LEFT IN PLACE
Deck Geometry:	6	EQUAL TO PRESENT MINIMUM CRITERIA
Underclearance-Vert/Lat.:	N	NOT APPLICABLE
Waterway Adequacy:	8	EQUAL TO PRESENT DESIRABLE CRITERIA
Approach Roadway Align:	8	EQUAL TO PRESENT DESIRABLE CRITERIA
Bridge Railing Appraisal:	2	Doesn't Meet Standards
Approach Guardrail:	333	Acceptable / Acceptable / Acceptable
Pier Navig Protection:	N	N/A

Insp by (Name): SCOTT SHOUP 3
Insp by (Name):
Utilities Attached: N N/A; N N/A; N N/A

Deck Wearing Surf: G BITUMINOUS OVERLAY
Deck Membrane: A WATERPROOF MEM SYST
Deck Protection: J NONE
Total Deck Thick: 25.8
Last Paint Date:
Inspection Remarks: CRACKING, SPALLING & DELAMINATIONS ON THE BOTTOM OF 5 BEAMS ALONG THE KEYWAY JO INTS.

** Actual Posted Limits **
Single Unit Vehicles: Tons
Combination Type 3S-1: Tons
Combination Type 3S-2: 33 Tons
One Truck At A Time:

Last Paint Type:

Underwater Inspection/Appraisal Information

Inspection Date:
Inspection Category:
Temperature:
Inspection Method:
Inspected By:
Inspected By:
Appraisal Rating:
Inspection Remarks:

Scour Critical Information

Rating: 8 CALCULATED SCOUR ABOVE FOOTING
Evaluation Method: B Rational Analysis
Analysis Date: 09/25/1996
Analysis By: FOUAD ALSABBAGH

Miscellaneous

Fracture Critical Members: No
Microfilm Data Recorded: Yes

Construction Information

Year: 1969 Original Reconstructed
Route: CH-11 Sta: 100+59 Sta:
Section Nbr: 32-BR
Contract Nbr:
Fed Aid Pr #: 00000000000000
Built By: 3 COUNTY AGENCY

Waterway Information

Flood Design Frequency: 0 YRS Drainage Area: 0 Acre
Flood Design Q (CFS): 0
Flood Design Nat H W E: 0 Flood Base Q (CFS): 0
Flood Des Open Prop: 0 SF Flood Base Nat H W E: 0

Proposed Improvement

Cost Estimate Year: 1997 Length: 51
Type of Work: 35 REHABILITATION DUE TO GENERAL DETERIORATION
Done By: 1 Contract
Remarks:

*** Costs in Dollars ***

Bridge Cost:	148
Roadway Cost:	15
Total Project Cost:	222

Illinois Department of Transportation

Memorandum

To:	Diane M. O'Keefe, District 1	Attn: Christopher J. Holt
From:	D. Carl Puzey	By: Jayme F. Schiff
Subject:	BRIDGE CONDITION REPORT APPROVAL	
Date:	June 22, 2011	

Kane County
Section 08-00386-00-BR

SN 045-0040

French Road (CH 11) over Burlington Creek

We have finished a review of the Bridge Condition Report for the above-designated bridge replacement project. We concur with the proposed replacement and the Bridge Condition Report is hereby approved.

Please note that approval of the project is contingent on approval by others of the proposed geometry, obtaining environmental signoffs, and any required historic structure coordination and other approvals required by statutes or the policies of the Department.

If you have any questions, contact Jim Klein at 217/782-5928 or Tom Cartmel at 217/782-5929.

TC/kkt0450040-20110622

RECEIVED
JUN 24 2011
BUREAU OF LOCAL
ROADS & STREETS

Illinois Department of Transportation

Memorandum

To:	Diane M. O'Keefe, District 1	Attn: Christopher J. Holt
From:	D. Carl Puzey	By: Jayme F. Schiff
Subject:	PRELIMINARY BRIDGE DESIGN APPROVAL	
Date:	November 23, 2011	

RECEIVED
NOV 28 2011
BUREAU OF LOCAL
ROADS & STREETS

Highway Bridge Program
Kane County
Section 08-00386-00-BR

SN 045-3072

French Road over Burlington Creek

We have finished a review of the Preliminary Bridge Design and Hydraulic Report (PBDHR) for the above-designated project. We concur with the proposed improvements and the preliminary bridge design is hereby approved. This approval is contingent on the issuance of a Floodway Permit either by your office or by the Schaumburg IDNR Office of Water Resources. We also recommend, based on the soil characteristics, consideration be given to using metal shell piles to support the integral abutments.

The PBDHR indicates that the County would like to have the Department perform the steel fabrication inspection. Please advise the County that a letter requesting fabrication inspection should be sent to the Bureau of Bridges and Structures (BBS) as soon as possible after the steel fabricator is determined. The letter (see attached example) should include the following:

1. Job information (structure number, route, section, county, IDOT contract # if applicable, C-# if applicable).

2. Point of contact for questions and who to send reports to at job completion; name, contact and location for fabricator and prime contractor.

3. The approximate start date and duration if known.

This request essentially authorizes the BBS' shop drawing reviewer and/or fabrication inspector to act as the county's representative. The inspector will need a copy of the shop drawings, approved by either this office or the county's consultant. If the shop drawings were not reviewed by the BBS, a second copy should also be provided to the BBS for office use in assisting the inspector with technical or interpretation questions. The inspector and this office will also require reference copies of any special provisions or project-specific specifications applicable to fabrication that are different from IDOT's Standard & Supplemental Specifications.

Please be aware fabrication inspection services supplied by the Department are subject to resource availability and are not guaranteed. In particular, if the fabricator is located outside the area served by Department inspectors, it may be necessary for the County to retain the services of their own fabrication inspection service to ensure the inspection of the steel.

The Scour Critical Evaluation Coding Report was submitted and is acceptable with the modification of coding Item 113 as "8" instead of "5".

The final structural plans and specifications for this project may be accepted by the District based on the Structural Engineer's seal, certification and signature per BLRS Manual Section 23-7.02.1. If you have any questions, contact Jim Klein at 217/782-5928 or Tom Cartmel at 217/782-5929.

TC/kkt0453072-20111123

LIVINGSTON COUNTY HIGHWAY DEPARTMENT

David R. Winters, P.E., *County Engineer*
Clay A. Metcalf, P.E., *Asst. County Engineer*
1705 S. Manlove Street
Pontiac, Illinois 61764
Ph. (815) 842-1184
FAX (815) 842-3305

April 9, 2002

Structure No.: 053-4146
District: 3
Section: 93-22136-00-BR
Contract No.: 87132
Job No.: C-93-131-95
Project No.: BRM-5056(7)
Route: FAI-5106

Major Bridge Program
Pontiac Road District
"Heisner's Island Bridges"

~~Mr. John A. Morris, Structural Services Section~~
Illinois Department of Transportation
Bureau of Bridges and Structures, Room 240
2300 South Dirksen Parkway
Springfield, Illinois 62764
Attn: Fabrication Unit

RECEIVED
BUREAU OF BRIDGES
AND STRUCTURES
APR 11 2002

TJD	REA	DISC
TEA	~~BKJ~~	CIRC
JAM		POST

Gentlemen:

We formally request that the Illinois Department of Transportation perform shop inspection of the steel structures to be fabricated for the above captioned project. This is in accordance with ~~Chapter 5, Section 5(c) of the Federal Aid Procedures for Local Highway Improvements manual~~ Bureau of Local Roads and Streets Manual Section 13-4.01(a.). The prime contractor and fabricator information are as follows:

Prime Contractor	Fabricator
H.J. Eppel & Co., Inc.	Delong Inc.
1400 Tuesburg Court	P.O. Box 479
Pontiac, IL 61764	Jefferson City, MO 65102-0479
Mark Eppel (815)844-7269	Darrin B. Kelly (573)635-6121

During the preconstruction meeting it was stated that structural steel is scheduled to be delivered in September of 2002. If you have any questions concerning this submittal, please do not hesitate to call and ask for Clay Metcalf.

Very truly yours,

David R. Winters
County Engineer

DRW:cam

CC: IDOT - District 3
H.J. Eppel & Co., Inc.
Delongs Inc.

Z:\TWPWork\Pontiac 22\Bridges\22136br-Heisner Island\CONSTRUCTION\FabricationInspection-IDOT.doc

Illinois Department of
Natural Resources
One Natural Resources Way Springfield, Illinois 62702-1271
http://dnr.state.il.us

Pat Quinn, Governor
Marc Miller, Director

Office of Water Resources • 2050 West Stearns Road • Bartlett, Illinois 60103

October 25, 2011

RECEIVED
OCT 26 2011
Wills Burke Kelsey Associates

John Witte
Wills Burke Kelsey Associates
116 West Main Street, Suite 201
St. Charles, Illinois 60174

Dear Mr. Witte:

French Road Bridge Replacement over Burlington Creek, Kane County

Thank you for your October 5, 2011 letter regarding the above-referenced project. The project site is located in the Northwest Quarter of Section 33, Township 42 North, Range 10 East of the Third Principal Meridian in Kane County.

Upon review we concur that the project site is located in a rural area. An Illinois Department of Natural Resources, Office of Water Resources permit is required as the drainage area of Burlington Creek exceeds 10 sq. mi. The subject bridge replacement may be automatically authorized by Statewide Permit No. 2 provided it is constructed in accordance with all the applicable special conditions of the statewide permit. Please notify our office in writing if you are unable to meet any of the applicable special conditions so that we can review the project for possible issuance of a formal permit.

The above determination does not exempt the project from meeting the requirements of any other local, state or federal agency. Information on regional permits, statewide permits and general permits can be found on our web site at http://dnr.state.il.us/owr.

If you have any questions regarding this letter, please contact Bruno Athmanathan of my staff at 847/608-3100 x-2025.

Sincerely,

Gary W. Jereb, P.E., Chief
Northeastern Illinois Regulatory Programs

GJ/BA:

cc: Kane County Development Department

APPENDIX D

PERMIT COORDINATION

116 West Main Street, Suite 201
St. Charles, Illinois 60174
Phone: 630.443.7755
Fax: 630.443.0533
www.wbkengineering.com

WILLS BURKE KELSEY ASSOCIATES

MEETING NOTES

Date: November 29, 2011

By: Natalie Paver

Attendees: Kimberly Kubiak, USACE Chicago District
Natalie Paver, WBK

Copies To: File

Subject: French Road over Burlington Creek Wetlands (WBK #09-0057)

Meeting Date: October 18, 2010

Location: On-site

An on-site meeting was held on October 18, 2010 to verify the limits of the wetland delineation. The wetland delineation was performed on August 17, 2010 by Wills Burke Kelsey Associates, Ltd (WBK). Items discussed at the meeting included the wetland indicator criteria for vegetation, soils, and hydrology. The original delineation included wetlands on each side of the French road and Burlington Creek bridge crossing. Also, two ditches were delineated along French Road. The ditches were located on the north east side and south west side of the road and creek crossing.

Kim Kubiak confirmed the wetland delineation limits along the creek. She did not accept the delineation limits of the two ditches along the road. WBK agreed that these areas should not be considered wetland, and removed the ditches from the wetland delineation exhibits and report.

It was also discussed that the portion of Burlington Creek east of French Road was considered an unrated stream in the Kane County ADID, but the portion of the creek west of the road was considered a high quality stream in the ADID map. This information would be important during permitting.

Kim Kubiak assigned the project to LRC # 2010-363.

The above notes do not constitute minutes from the meeting, they are only notes of various topics that were discussed and may not be all-inclusive. If there are any discrepancies, please contact Wills Burke Kelsey Associates, Ltd.

APPENDIX E

FHWA COORDINATION

Project	French Road over Burlington Creek	Meeting Date	September 13, 2011
Client/Agency	Kane County Division of Transportation	Meeting Time	2:45 P.M.
IDOT Section #	08-00386-00-BR	Meeting Location	IDOT D1
IDOT Job #	P-91-270-09	Meeting Organizer	Andy Underwager
IDOT Project #	BROS-0089(147)	Meeting Topic	IDOT/FHWA Coord.
WBK Project #	R03.090057.00000		1st Presentation

Purpose of Meeting: Concurrence on scope, termini, geometry and CE II processing

1. Introductions/ Attendees: See Attendance Roster

2. General comments made by Andy Underwager (WBK) / Brent Pottorff (WBK):

   - Bridge originally built in 1969. The wearing surface was removed and replaced in 1981
   - The sufficiency ratio is 49.1, making it eligible for replacement
   - The BCR has been approved
   - The scope of work is bridge replacement from approach to approach
   - Project limits were determined by the extent of approach work necessary to transition profile and cross-section into existing section and the guard rail length of need
   - Proposed profile established to match existing profile which is generally flat at 0.10%
   - Proposed cross-section consists of two (2) – 12' lanes with 2% cross slope and 8' paved shoulders
   - Traffic to be staged during construction maintaining one lane of traffic across the bridge utilizing temporary bridge traffic signals
   - ESR has been submitted; Cultural Clearance received
   - The creek parallels the roadway along the east side of French Road before turning west almost 90 degrees underneath the existing bridge. Over time the creek has meandered to the north causing scour at the northeast wingwall.
   - Wetland impacts are anticipated and will be mitigated at a wetland bank
   - Compensatory storage is required and anticipated to be provided on the northeast side of the bridge within the existing right-of-way
   - Burlington Creek is a non-regulatory floodway, Zone A. Intent is to permit project under Statewide Permit 2
   - The local agency is Kane County and the project manager for the County is Mike Zakosek.

3. Discussion:

   Scope:

   The existing structure is structurally deficient due to the poor condition of the deck and superstructure. The BCR has been submitted and approved for bridge replacement. Superstructure replacement was considered but due to the insufficient capacity of the existing substructures to accommodate the proposed loading, bridge replacement was the only feasible option.

   "Design Criteria for New or Reconstructed Suburban/Urban Arterial Bridges", Figure 36-5B were utilized. The bridge will be sized to accommodate the 30-yr flood frequency, provide 1-foot of freeboard to the low

chord and rip-rap armored slope walls provided to stabilize the meandering channel and prevent the potential for lateral scour. Type SM steel railing will be provided.

The FHWA and IDOT confirmed the bridge is eligible for HBP funding and the FHWA concurred on the scope of work.

Geometry:

"Geometric Design Criteria for Suburban Arterials", Figure 32-2C were utilized to develop the proposed geometry. The typical section consists of two (2) - 12' lanes and 8' paved shoulders. Since the surrounding land use is agricultural, curb and gutter is not warranted. Guardrail will be provided in areas where side slopes are greater than 1V:4H.

The proposed profile, 0.10% was established to minimize the need for right-of-way, compensatory storage and wetland impacts. In addition, Section 4(f) protected resources on the east side of French Road were avoided as well as impacts to the private entrances and properties north of the bridge.

Right-of-way and temporary easements are required on the west side of French Road to accommodate widening and a proposed drainage ditch. Two parcels would be affected. Right-of-way is not anticipated from the 4(f) resource.

The FHWA concurred on the proposed geometry, but asked the Consultant to update the projected traffic counts to 2040 since the project will not be built until 2013 or 2014.

Termini:

The termini were established to provide a smooth transition with the existing pavement elevations based on a slight raise in profile. In addition, the length of need for guardrail dictated the limits at the south end of the project. The project length is anticipated to be Sta. 15+00 to Sta. 24+55 (955 LF).

The FHWA concurred on the termini pending approval of the Preliminary Bridge Design and Hydraulic Report.

CE II Processing:

Due to the scope of work, the FHWA concurred to process this project as a CE II.

Public Involvement:

Since only two parcels are anticipated to be affected, the consultant proposed to publish a notice for public comment in lieu of a public meeting/hearing. The FHWA suggested sending a letter to the parcel owners outlining the project, the amount of right-of-way and/or easement needed and the appraisal and negotiation process. WBK agreed to this.

The FHWA concurred on the public involvement process of the project.

Design Variances:

The consultant identified the following design exceptions:

- Side Slopes: 1V:3H are proposed along French Road behind the guardrail to transition the steeper 1V:2H slopes near the bridge. 1V:4H side slopes for fill sections are required. **FHWA concurred.**

- Clear Zone Protection: The guardrail on the west side for southbound traffic is less than the length of need for a 30' clear zone. The required run out length is 425'. Approximately, 250' is provided due to the proximity of two private entrances. **FHWA concurred.**

4. Action Items:

- Update projected ADT counts for the design year 2040
- Submit PBDHR
- Submit Wetland Report and Wetland Impact Evaluation (WIE)

Illinois Department of Transportation

FHWA/Local Coordination Meeting Attendance Roster

Agency Name:	Kane County		
Project & Topic:	French Road over Burlington Creek: Bridge replacement; Scope, geometry, termini, CE 2 processing		
Section No.:	08-00386-00-BR		
Date:	September 13, 2011	**Time:**	2:45 PM
Location:	Region/District One	**Room:**	Executive Conference Room

	NAME (Please Print)	REPRESENTING	PHONE NUMBER
1	Chris Holt CH	IDOT BLRS	(847) 705-4201
2	Salmon Danmole SD	IDOT CBLRS	(217) 785-2798
3	Dennis Bachman	FHWA	(217) 492-4283
4	Chris Byars [illegible]	FHWA	(312) 886-1606
5	Robin Helmerichs [illegible]	FHWA	(217) 492-4615
6	Michael Hine	FHWA	(217) 492-4634
7	P.J. Fitzpatrick	Wills Burke Kelsey Assoc.	(630) 443-7755
8	Brent Pottorff	"	"
9	Andy Underwager	"	"
10	aunderwager@ubkengineering.com		
11	MARLIN SOLOMON	IDOT - BLRS - D1	(847) 705-4407
12	SOLOMON WILCAR	IDOT - BLRS - D1 (McBorough Assoc.)	(847) 705 4205
13			
14			
15			
16			
17			
18			
19			
20			
21			
22			
23			
24			
25			

APPENDIX F

UTILITY COORDINATION

Thank you for contacting JULIE, Inc. regarding your upcoming digging project.

Please review and print your locate request ticket below for your records. If any of the information is incorrect, please contact a JULIE call center agent by simply dialing 811 or 800-892-0123 and refer to the locate request number. The agents are available 24/7.

For information about the next steps in the process, a copy of JULIE's Homeowner's Guide, and an explanation of the color-code markings, visit www.illinois1call.com/e_request/what_happens_next.htm

Dig No : A1801492 Rev : 00A Digstart: 12/29/10 13:42
Rcvd : 06/29/10 13:44 Priority: 2 Expires : 01/01/00 00:00
Org Dig: A1801492 Rcvd: 06/29/10 13:41

Firm : WILLS BURKE KELSEY Caller: ANDREW HAGLUND
CoAddr1: 116 W. MAIN ST., STE. 201
City,St: ST. CHARLES, IL Zip : 60174
Phone : 630-443-7755 Ext : Fax: 630-443-0533
Call Bk: Done For : KANE CO DIVISION OF TRANS.
SiteCnt: SAME
Email : AHGLUND@WBKENGINEERING.COM

County : KANE Place: HAMPSHIRE
Address:
Subdiv : Cross:

Grids : T42NR06E33**

BestFit: 42.081095/-88.549463 42.081095/-88.530084
: 42.066431/-88.549463 42.066431/-88.530084
PreMark: NO Directional Boring: NO Depth>7Ft: YES
Locatn : IN THE TOWNSHIP OF HAMPSHIRE, ** APPROX 2 MILES WEST OF HAMPSHIRE
WrkType: DESIGN STAGE/REPLACE BRIDGE, ROAD WAY APPROACHES
Extent : WORK WILL BE DONE SECTIONS AND QUARTERS
Remarks:

Members:

ATT51A ATT/DISTRIBUTION		
305735495		630-573-5450x2nd 6
CEC00A COMED / JOLIET	DESIGN STAGE LOCATE LINE	630-576-7094
NICR0A NICOR GAS	UTILITY CONSULTANT G03W	630-388-2362
SMP3A USIC LOCATING SERVICE-ROCKFOR	Information not provided	
TXMA7A MEDIACOM	DON DEMAY	630-365-0045x6001

at&t

October 12,2010

RECEIVED
OCT 21 2010
Wills Burke Kelsey Associates

Mr. Kevin Anderson, P.E.,PTOE
Wills Burke Kelsey Associates
116 West Main Street, Suite 201
St. Charles,Illinois 60174

RE: Walker Road over Burlington Creek/French Rd over Burlington Creek
Kane County Dept. of Transportation
Sec. 08-00386-00-BR
Job No.: P91-270-09
Project No.: BROS-0089(147/155)

Dear Mr. Anderson:

Please find enclosed, a redline copy of your plans showing the location of AT&T facilities along Walker Rd. There is one buried cable along the west side of the road approx. 3' from the RW and crossing to the east and then south at sta 14+00. I have also attached a copy of a pedestal location on the SE corner of Allen & Walker due to the small size of the provided plans. I have also provided a sketch of AT&T facilities locations on French Rd. with approx. distances from the edge of pavement.

If I can be of any further assistance, please contact me at 815-394-7297.

Sincerely yours,

David Saint Germain
Legal Mandate Engineer
815-394-7297

ComEd
Rockford Business Office
123 Energy Avenue
Rockford, IL 61109-1099

September 10, 2010

Kevin Anderson, P.E.
Wills Burke Kelsey Associates
116 West Main St., Suite 201
St. Charles, IL 60174

Re: H11045DKB - French Rd over Burlington Creek - Kane County

Dear Kevin,

This letter is to notify you that we have received your request, dated September 7, 2010, for ComEd to review the subject area and provide a response. ComEd will review the project area and research existing facilities and easements to determine potential conflict and associated costs to the requestor, if applicable.

In an effort to support your project successfully, the following will be required prior to beginning Engineering Design:

1. Letter from requesting agency stating expected relocation completion date and your direction for ComEd to proceed with engineering design.
2. Stamped Pre-final or Final Plans submitted with your letter of direction.
3. Agency's anticipated construction start and finish date.

Upon receiving the above-mentioned letter and plans, the following timelines are required to relocate our facilities:

1. 4 to 10 weeks for engineering design, then
2. 10 to 12 weeks prior to ComEd construction start for scheduling, ordering materials, securing resources, coordinating customer outages and attaining permits.
3. Construction duration depends on amount of relocation required. Typically 3 to 4 weeks for 7 poles or less. However, overall timeline may vary based upon scope and complexity of work required.

Upon review of your submitted pre-final or final plans and your letter of direction to have ComEd proceed with relocation, I will work with you to schedule and coordinate our activities. If I can answer any questions please do not hesitate to contact me.

Thank you,

Michael Lenox
Public Relocation Department
(815)490-2869
michael.lenox@comed.com

Cc: Mike Zakosek - Kane County DOT

ComEd

Project Review Response

Subject:	**French Rd over Burlington Creek**	Project #:	**H11045DKB**
		P.L. #:	**420-33N**
Section:	**08-00386-00-BR**	Town:	**Hampshire Twp**
Contract:		County:	**Kane**

September 10, 2010

To: Kevin Anderson, P.E.
Wills Burke Kelsey Associates

From: Mike Lenox
Public Relocation Group
123 Energy Ave.
Rockford, IL 61109

This is in response to your letter dated September 7, 2010.

Distribution Engineering has reviewed plans for the above mentioned project. This project conflicts with our distribution facilities as indicated below:

☐ Existing _____ kV distribution facilities have been marked in red on the enclosed plans.

☐ There are no existing overhead facilities in the subject area.

☒ There are existing **12** kV overhead facilities and **unknown** poles in conflict with the subject improvement. The contractors should use caution in operating cranes or other equipment near our overhead facilities.

☒ There are no existing underground facilities in the subject area.

☐ There are existing _____ kV underground/conduit facilities in the subject area. We request that J.U.L.I.E. be contacted 72 hours prior to the start of construction.

☐ The proposed work should not conflict with our distribution facilities.

☒ Construction will be scheduled to begin approximately 20 weeks from receipt of detailed plans and letter of direction from Kane County DOT.

☐ It will take approximately _____ construction days to clear the conflicts.

If additional information is required, please contact Mike Lenox at (815) 490-2869 or michael.lenox@comed.com.

Remarks:
ComEd has an overhead line along the west side of French Rd through the project limits.

116 West Main Street, Suite 201
St. Charles, Illinois 60174
Phone: 630.443.7755
Fax: 630.443.0533
www.wbkengineering.com

WILLS BURKE KELSEY ASSOCIATES

October 24, 2011

Mr. Matt Forgas
Mediacom
808 E. North Street
Elburn, Illinois 60119

RE: 09-0057 *French Road over Burlington Creek*
Kane Co. Division of Transportation
Sec. 08-00386-00-BR
Job No.: P91-270-09
Project No.: BROS-0089(147)
JULIE Design Stage Dig No. A1801492

Dear Mr. Forgas,

Our office is assisting the Kane County Division of Transportation with the preliminary engineering for the replacement of the French Road Bridge over Burlington Creek and the associated roadway and ditch reconstruction. The bridge is located approximately 1 mile south of the Ill. Rte. 72 and Kane County Highway 11 intersection. The limits of the project will be approximately 700' in each direction of the bridge crossing. The attached exhibits show the project location and the preliminary plan.

We request that you provide us with information regarding the location and status of your existing and proposed facilities within the project limits to enable our office to incorporate them into our Preliminary Plans and identify potential conflicts.

Our office and the Kane County Division of Transportation will appreciate your prompt attention to this matter. If you have any questions or require additional information regarding this matter, please call me at 630-443-7755 or email me at KAnderson@WBKEngineering.com.

Sincerely,
Wills Burke Kelsey Associates

Kevin Anderson, P.E.

Cc:
Mike Zakosek – KDOT
S. Brent Pottorff – WBK
Andy Underwager – WBK
Lee Rivera - IDOT

nicor GAS

Nicor Gas
1844 Ferry Road
Naperville, IL 60563-9600

Mailing Address:
P.O. Box 190
Aurora, IL 60507-0190

Phone 630 983-8676
Internet www.nicor.com

September 20, 2010

Mr. Kevin Anderson, P.E., PTOE
Wills Burke Kelsey Associates
116 West Main Street, Ste 201
St. Charles, Illinois 60174

Re: French Road over Burlington Creek
Section: 08-00386-00BR
Job No. P91-270-09
Project No. BROS-0089(147)
JULIE Dig # A1801492

Dear Mr. Anderson:

Due to the receipt of numerous projects, the normal response time has been somewhat delayed. I apologize for any inconvenience.

With reference to your request received on September 9, 2010, I am returning one set of marked plans along with our atlas pages indicating the location of our gas main(s) in the area of your proposed project. The dimensions and location of Nicor Gas utility facilities as shown on these plans are an estimate for design purposes only, and are not intended for use as field locations for construction. Nicor Gas does not warrant accuracy. These pages are considered confidential. Please handle these pages accordingly.

Note: Relocation is possibly reimbursable.

If potential conflicts are anticipated, please supply us with a **large set** of pre-final plans **including right-of-way and cross-sections** and ample time for design and relocation of our mains and services (if necessary) to adhere to your tentative scheduled letting date. **NOTE: design analysis occurs after receipt of pre-final plans. Ample time requires a minimum of 6 months for design and planning.** This time does not take into consideration the installation our mains and services or reimbursable requirements if applicable.

Utility rights are generally documented through permit, license or easement and in some cases, Nicor Gas may own property. It is up to the requesting/design party(s) to research existing land rights of their proposed project. Nicor Gas will perform its own investigation to determine if any portion is reimbursable when construction is requested to relocate gas main.

Please phone JULIE at 811 or 1-800-892-0123, 48 hours prior to construction for location of our facilities within your proposed improvement.

Your project has been assigned Engineering # **N7622.** Please refer to this number in all future correspondence to assist with expediting any future inquiry.

Thank you for your cooperation in this matter.

Sincerely,

Constance Lane/ba

Constance (Connie) Lane
Engineering Administrator
(630) 388-3830 direct
(630) 983-0639 fax

ba: **N7622**
enclosures

APPENDIX G

PUBLIC INVOLVEMENT

LETTERS TO PROPERY OWNERS
TO BE INSERTED HERE